Silicon NPN Power Transistors 2N5989 2N5990 2N5991

DESCRIPTION

- With TO-3PN package
- Complement to type 2N5986/5987/5988
- Low collector saturation voltage

APPLICATIONS

- Designed for use in general purpose power amplifier and switching circuits.

PINNING

PIN	DESCRIPTION
1	Base
2	Collector;connected to mounting base
3	Emitter

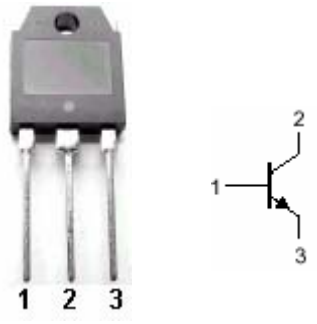

Fig.1 simplified outline (TO-3PN) and symbol

Absolute maximum ratings(Ta=℃)

SYMBOL	PARAMETER		CONDITIONS	VALUE	UNIT
V_{CBO}	Collector-base voltage	2N5989	Open emitter	60	V
		2N5990		80	
		2N5991		100	
V_{CEO}	Collector-emitter voltage	2N5989	Open base	40	V
		2N5990		60	
		2N5991		80	
V_{EBO}	Emitter-base voltage		Open collector	5	V
I_C	Collector current			12	A
I_{CM}	Collector current-peak			20	A
I_B	Base current			4	A
P_C	Collector power dissipation		T_C=25℃	100	W
T_j	Junction temperature			150	℃
T_{stg}	Storage temperature			-65~150	℃

THERMAL CHARACTERISTICS

SYMBOL	PARAMETER	MAX	UNIT
$R_{th\ j\text{-}c}$	Thermal resistance junction to case	1.25	℃/W

Silicon NPN Power Transistors 2N5989 2N5990 2N5991

CHARACTERISTICS

Tj=25℃ unless otherwise specified

SYMBOL	PARAMETER		CONDITIONS	MIN	TYP.	MAX	UNIT
$V_{CEO(SUS)}$	Collector-emitter sustaining voltage	2N5989	I_C=0.2A ;I_B=0	40			V
		2N5990		60			
		2N5991		80			
$V_{CEsat-1}$	Collector-emitter saturation voltage		I_C=6A ;I_B=0.6A			0.6	V
$V_{CEsat-2}$	Collector-emitter saturation voltage		I_C=12A; I_B=1.8A			1.7	V
V_{BEsat}	Base-emitter saturation voltage		I_C=12A; I_B=1.8A			2.5	V
V_{BE}	Base-emitter on voltage		I_C=6A ; V_{CE}=2V			1.4	V
I_{CEO}	Collector cut-off current	2N5989	V_{CE}=20V; I_B=0			2.0	mA
		2N5990	V_{CE}=30V; I_B=0				
		2N5991	V_{CE}=40V; I_B=0				
I_{CEX}	Collector cut-off current		V_{CE}=RatedV_{CE};V_{BE}=-1.5V T_C=125℃			0.2 2.0	mA
I_{EBO}	Emitter cut-off current		V_{EB}=5V; I_C=0			1.0	mA
h_{FE-1}	DC current gain		I_C=1.5A ; V_{CE}=2V	40			
h_{FE-2}	DC current gain		I_C=6A ; V_{CE}=2V	20		120	
h_{FE-3}	DC current gain		I_C=12A ; V_{CE}=2V	7.0			
C_{OB}	Output capacitance		I_E=0 ; V_{CB}=10V;f=1MHz			300	pF
f_T	Transition frequency		I_C=0.5A ; V_{CE}=10V;f=1MHz	2.0			MHz

PACKAGE OUTLINE

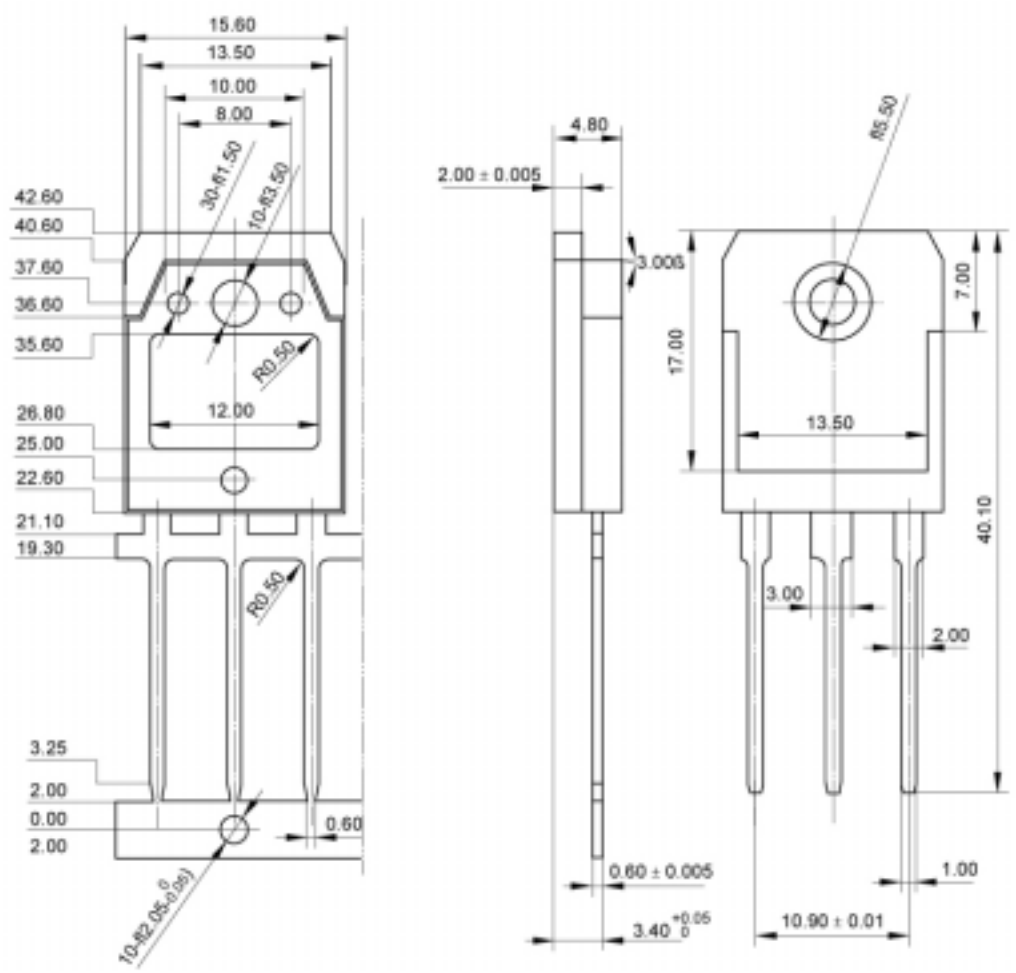

Fig.2 outline dimensions (unindicated tolerance:±0.10mm)