2N4091 – 2N4093 / ITE4091 – ITE4093

N-Channel JFET Switch

FEATURES

- Low $r_{DS(on)}$
- $I_{D(OFF)}$<200pA
- Fast Switching

PIN CONFIGURATION

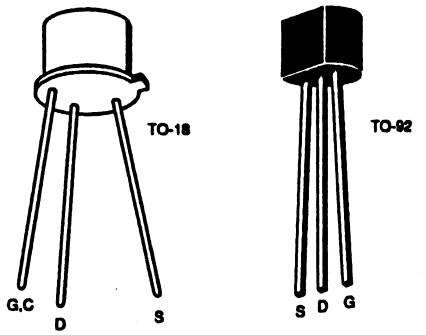

ABSOLUTE MAXIMUM RATINGS

(T_A = 25°C unless otherwise noted)

Gate-Source or Gate-Drain Voltage ..... -40V
Gate Current 10mA
Storage Temperature Range ..... -65°C to +200°C
Operating Temperature Range ..... -55°C to +200°C
Lead Temperature (Soldering, 10sec) ..... +300°C

	TO-18	TO-92
Power Dissipation	1.8W	360mW
Derate above 25°C	10mW/°C	3.3mW/°C

Plastic
Storage ..... -55°C to +150°C
Operating ..... -55°C to +135°C

NOTE: Stresses above those listed under "Absolute Maximum Ratings" may cause permanent damage to the device. These are stress ratings only and functional operation of the device at these or any other conditions above those indicated in the operational sections of the specifications is not implied. Exposure to absolute maximum rating conditions for extended periods may affect device reliability.

ORDERING INFORMATION

Part	Package	Temperature Range
2N4091	Hermetic TO-18	-55°C to +200°C
X2N4091	Sorted Chips in Carriers	-55°C to +200°C
2N4092	Hermetic TO-18	-55°C to +200°C
X2N4092	Sorted Chips in Carriers	-55°C to +200°C
2N4093	Hermetic TO-18	-55°C to +200°C
X2N4093	Sorted Chips in Carriers	-55°C to +150°C
ITE4091	Plastic TO-92 Package	-55°C to +150°C
ITE4092	Plastic TO-92 Package	-55°C to +150°C
ITE4093	Plastic TO-92 Package	-55°C to +150°C

ELECTRICAL CHARACTERISTICS (T_A = 25°C unless otherwise specified)

SYMBOL	PARAMETER	2N/ITE 4091		2N/ITE 4092		2N/ITE 4093		UNIT	TEST CONDITIONS	
		MIN	MAX	MIN	MAX	MIN	MAX			
BV_{GSS}	Gate-Source Breakdown Voltage	-40		-40		-40		V	I_G = -1μA, V_{DS} = 0	
I_{DGO}	Drain Reverse Current		200		200		200	pA	V_{DG} = 20V, I_S = 0	
			400		400		400	nA		T_A = 150°C
I_{GSS}	Gate Reverse Current		-100		-100		-100	pA	V_{GS} = -20V, V_{DS} = 0	
	(ITE devices only)		-200		-200		-200	nA		T_A = 150°C

SYMBOL	PARAMETER	2N/ITE 4091		2N/ITE 4092		2N/ITE 4093		UNITS	TEST CONDITIONS	
		MIN	MAX	MIN	MAX	MIN	MAX			
V_P	Gate-Source Pinch-Off Voltage	-5	-10	-2	-7	-1	-5	V	V_{DS} = 20V, I_D = 1nA	
I_{DSS}	Saturation Drain Current (Pulse width 300ms, duty cycle ≤3%)	30		15		8		mA	V_{DS} = 20V, V_{GS} = 0 Pulse Test Duration = 2ms	
$V_{DS(ON)}$	Drain-Source ON Voltage						0.2	V	V_{GS} = 0	I_D = 2.5mA
					0.2					I_D = 4mA
			0.2							I_D = 6.6mA
$r_{DS(on)}$	Static Drain-Source ON Resistance		30		50		80	Ω	V_{GS} = 0, I_D = 1mA	
$r_{ds(on)}$	Static Drain-Source ON Resistance		30		50		80		V_{GS} = 0, I_D = 0, f = 1kHz	
C_{iss}	Common-Source Input Capacitance		16		16		16	pF	V_{DS} = 20V, V_{GS} = 0, f = 1MHz (Note 1)	
C_{rss}	Common-Source Reverse Transfer Capacitance		5		5		5		V_{DS} = 0, V_{GS} = -20V, f = 1MHz (Note 1)	
$t_{d(ON)}$	Turn-ON Delay Time (Note 1)		15		15		20	ns	V_{DD} = 3V, $V_{GD(ON)}$ = 0	
t_r	Rise Time (Note 1)		10		20		40		$I_{D(on)}$ / $V_{GS(off)}$ / R_1: 4091: 6.6mA / -12V / 425Ω; 4092: 4mA / -8V / 700Ω; 4093: 2.5mA / -6V / 1120Ω	
t_{off}	Turn-OFF Time (Note 1)		40		60		80			