Silicon NPN Power Transistors 2N3054 2N3054A

DESCRIPTION
·With TO-66 package

APPLICATIONS
·Designed for general purpose switching and amplifier applications

PINNING (See Fig.2)

PIN	DESCRIPTION
1	Base
2	Emitter
3	Collector



Fig.1 simplified outline (TO-66) and symbol

Absolute maximum ratings(Ta=25□)

SYMBOL	PARAMETER		CONDITIONS	VALUE	UNIT
V_{CBO}	Collector-base voltage		Open emitter	90	V
V_{CEO}	Collector-emitter voltage		Open base	55	V
V_{EBO}	Emitter-base voltage		Open collector	7	V
I_C	Collector current			4	A
I_B	Base current			2	A
P_D	Power dissipation	2N3054	T_C=25□	25	W
		2N3054A		75	
T_j	Junction temperature			200	□
T_{stg}	Storage temperature			-65~200	□

THERMAL CHARACTERISTICS

SYMBOL	PARAMETER		MAX	UNIT
$R_{th\ j\text{-}C}$	Thermal resistance junction to case	2N3054	7.0	□/W
		2N3054A	2.33	

CHARACTERISTICS

Tj=25□ unless otherwise specified

SYMBOL	PARAMETER	CONDITIONS	MIN	TYP.	MAX	UNIT
V_{CEO}	Collector-emitter breakdown voltage	I_C=0.1A ; I_B=0	55			V
$V_{CEsat-1}$	Collector-emitter saturation voltage	I_C=0.5A ;I_B=50mA			1.0	V
$V_{CEsat-2}$	Collector-emitter saturation voltage	I_C=3A; I_B=1A			6.0	V
V_{BE}	Base -emitter on voltage	I_C=0.5A ; V_{CE}=4V			1.7	V
I_{CEV}	Collector cut-off current	V_{CE}=90V;$V_{BE(off)}$=1.5V T_C=150□			1.0 6.0	mA
I_{CEO}	Collector cut-off current	V_{CE}=30V; I_B=0			0.5	mA
I_{EBO}	Emitter cut-off current	V_{EB}=7V; I_C=0			1.0	mA
h_{FE-1}	DC current gain	I_C=0.1A ; V_{CE}=10V	40			
h_{FE-2}	DC current gain	I_C=1A ; V_{CE}=2V	8		80	
f_T	Transition frequency	I_C=0.2A ; V_{CE}=10V;f=1MHz	3.0			

PACKAGE OUTLINE

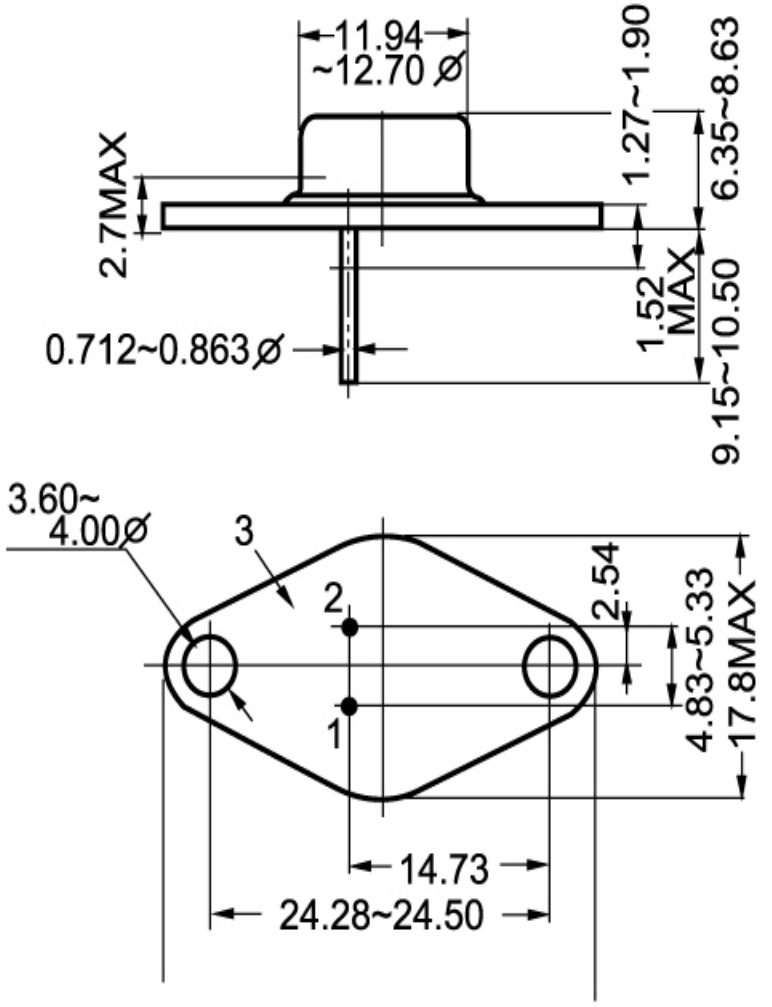

Fig.2 Outline dimensions

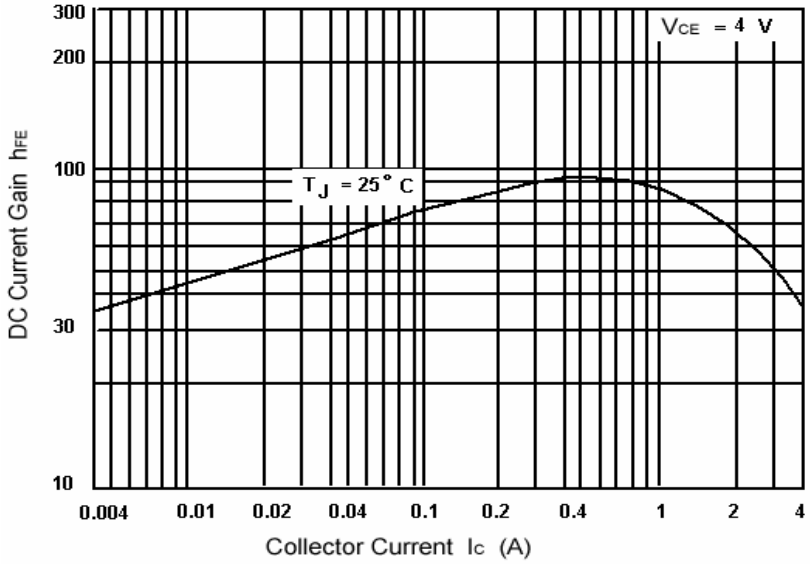

Fig.3 DC current Gain

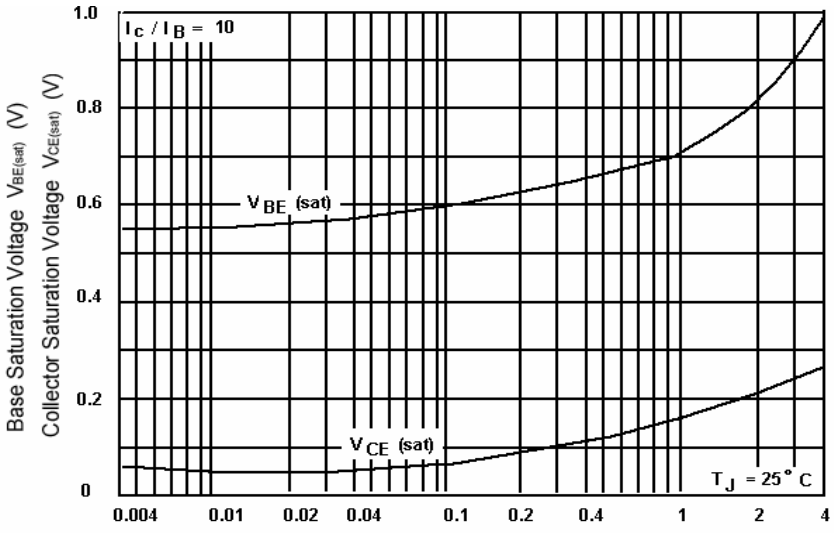

Fig.4Base-Emitter Saturation Voltage
Collector-Emitter Saturation Voltage

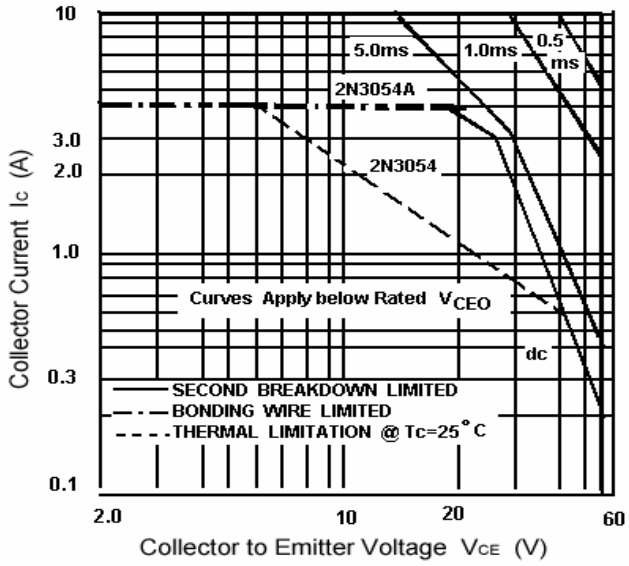

Fig.5 Safe Operating Area