Downloaded from Alldatasheet.com

AMERICAN MICROSEMICONDUCTOR

GERMANIUM PNP MESA TRANSISTORS

Type	V_{CBO} V Max	V_{EBO} V Max	V_{CE} V Max		I_{CBO} @V_{CB} V	I_{CBO} μA Max	h_{FE} Min	h_{FE} Max	@I_C mA	Cob pf Max	fab MHZ Min	Pack Outline	Power Dissipation @25°C MW
2N828A	15	2.5			6	3.0	25-		10	4.0	300	TO-18¹	150
2N829	15	2.5			6	3.0	50-		10	4.0	300	TO-18¹	150
2N808	30	2.5			15	10.0	30-		10	4.0		TO-18¹	150
2N960	15	2.5	7		6	3.0	20-		10	4.0	300	TO-18¹	150
2N961	12	2.0	7		6	3.0	20-		10	4.0	300	TO-18¹	150
2N962	12	1.2	7		6	3.0	20-		10	4.0	300	TO-18¹	150
2N962	12	1.3	7		6	3.0	20-		10	5.0	300	TO-18¹	150
2N963	12	2.0			6	5.0	20-		10	5.0	300	TO-18¹	300
2N964	15	2.5	7		6	3.0	40-		10	4.0	300	TO-18¹	150
2N964	15	2.5	7		6	3.0	40-		10	5.0	300	TO-18¹	150
2N964A	15	2.5	7		6	3.0	48-		10	4.0	300	TO-18¹	150
2N965	12	2.0	7		6	3.0	40-		10	4.0	300	TO-18¹	150
2N966	12	1.2	7		6	3.0	40-		10	4.0	300	TO-18¹	150
2N967	12	2.0			6	5.0	40-		10	4.0	300	TO-18¹	300
2N968	15	2.5			6	3.0	17-		10	8.0	300	TO-18¹	150
2N969	12	2.0			6	3.0	17-		10	8.0	300	TO-18¹	150
2N970	12	1.2			6	3.0	17-		10	8.0	300	TO-18¹	150
2N971	7	1.2			6	10.0	17-		10	8.0	300	TO-18¹	150
2N972	15	2.5			6	3.0	40-		10	8.0	300	TO-18¹	150
2N973	12	2.0			6	3.0	40-		10	8.0	300	TO-18¹	150
2N974	12	1.2			6	3.0	40-		10	8.0	300	TO-18¹	150
2N975	7	1.2			6	10.0	40-		10	8.0	300	TO-18¹	150
2N985	15	3.0	7		5	3.0	40-		10	6.0		TO-18¹	300
2N2635	30	2.5	15		25	5.0	30-		10	5.0		TO-18¹	300
2N3449	15	1.5	6		6	3.0	20-		10	5.0		TO-18¹	150

¹grounded collector

GERMANIUM PNP SMALL SIGNAL TRANSISTORS

Type	V_{CBO} V Max	V_{EBO} V Max	V_{CE} V Max	I_{CBO} @V_{CB} V	I_{CBO} μA Max	h_{FE} Min	h_{FE} Max	@I_C mA	Cob pf Max	fab MHZ Min	Outline	Power Dissipation @25°C MW
2N43A	45	5	30	45	16	34-65		20	60	0.5	R-32	240
2N44A	45	5	30	45	16	18-43		20	60	0.5	R-32	240
2N45	25	5	25	45	16	18-43		20	60	0.5	R-32	155
2N186A	25	5	25	25	16	19-31		20		0.8†	R-32	200
2N187A	25	5	25	25	16	25-42		20		1.0†	R-32	200
2N188A	25	5	25	25	16	34-65		20		1.2†	R-32	200
2N190	25		25	25	16	34-65		20		1.0†	R-32	200
2N191	25		25	25	16	53-121		20		1.2†	R-32	200
2N192	25		25	25	16	52-176		20		1.5†	R-32	200
2N241A	25	5	25	25	16	50-125		20		1.3†	R-32	200
2N319	25	3	20	25	16	25-42		20	30	2.0†	TO-5	225
2N320	25	3	20	25	16	34-65		20	30	2.5†	TO-5	225
2N321	25	3	20	25	16	53-121		20	30	3.0†	TO-5	225
2N322	16	10	18	16	16	34-65		20	30	1.0	TO-5	200
2N323	16	10	18	16	16	53-125		20	30	1.5	TO-5	200
2N324	16	10	18	16	16	72-198		20	30	2.0	TO-5	200
2N394	30	20	15	10	6	20-150		10	20	7.0†	TO-5	150
2N394A	30	20	15	12	6	30-120		10	20	7.0†	TO-5	150
2N395	30	20	15	15	6	20-150		10	20	6.0†	TO-5	200
2N396	30	20	20	20	6	30-150		10	20	5.0	TO-5	200
2N396A	30	20	20	20	6	30-150		10	20	5.0	TO-5	200
2N397	30	20	15	15	6	40-150		10	20	10.0	TO-5	200
2N398	105	50	105	105	12	20		5		1.0†	TO-5*	50
2N398A	105	50	105	105	50	20		5		1.0†	TO-5*	150
2N404	25	12	24	12	5	30		12	20	4.0	TO-5	150
2N404A	40	25	35	12	5	30		12	20	4.0	TO-5	150
2N413	30	20	18	12	5	32-300		10		5.5	TO-5	150
2N414	30	20	15	12	5	32-300		10		5.5	TO-5	150
2N426	30	20	10	30	25	30-60		1	20	6.0	TO-5	175
2N427	30	20	15	30	25	40-80		1	20	5.0	TO-5	175
2N428	30	20	12	30	25	60		1	20	10.0	TO-5	175
2N461	45	10	33	45	15	32-100		20		4.0†		200
2N464	45	12	40	20	15	14-26		1		0.7†	TO-5	150

AMERICAN MICROSEMICONDUCTOR

GERMANIUM PNP SMALL SIGNAL TRANSISTORS

Type	V_{CBO} V Max	V_{EBO} V Max	V_{CE} V Max	I_{CBO} @V_{CB} V	I_{CBO} μA Max	h_{FE} Min	h_{FE} Max	@I_C mA	Cob pf Max	fab MHZ Min	Outline*	Power Dissipation @25°C MW
2N465	45	12	30	20	15	27-45		1		0.8†	TO-5	150
2N466	35	12	20	20	15	56-90		1		1.0†	TO-5	150
2N467	35	12	15	20	15	112-180		1		1.2†	TO-5	150
2N508	20	10	18	20	6	99-198		20	35	2.5	TO-5	200
2N508A	30	10	25	25	7	100-200		20	35	2.5		200
2N522	15	10	8	15	2	120		1		15.0	TO-5	100
2N524	30	15	30	30	10	25-42		20	40	0.8	TO-5	225
2N525	45	15	30	30	10	34-65		20	40	1.0	TO-5	225
2N526	45	15	30	30	10	53-90		20	40	1.3	TO-5	225
2N527	45	15	30	30	10	72-121		20	40	1.5	TO-5	225
2N580	20	12	15	20	5	30		400	30	10.0	TO-5	120
2N581	18	10	15	15	6	20		20	30	4.0	TO-5	80
2N650	45	30	30	30	10	33		10	25	0.75	TO-5	200
2N651	45	30	30	30	10	45		10	25	1.0	TO-5*	200
2N652	45	30	30	30	10	80		10	25	1.25	TO-5	200
2N653	30	25	25	25	15	20		10	25	1.5†	TO-5	200
2N654	30	25	25	25	15	40		10	25	2.0†	TO-5	200
2N655	30	25	25	25	15	70		10	25	2.5†	TO-5	200
2N658	25	12	16	25	25	25-80		10	12	2.5	TO-5	167
2N659	25	12	14	25	25	40-110		10	12	5.0	TO-5	167
2N660	25	12	11	25	25	60-150		10	12	10.0	TO-5	167
2N661	25	12	9	25	25	75		10	12	15.0	TO-5	167
2N662	25	12	11	25	25	50		10	12	4.0	TO-5	167
2N1057	45	5	45	45	16	34-90		20	60	0.5	R-32	240
2N1097	16	5	18	16	16	34-90		20	35	1.0	TO-5	200
2N1098	18	5	18	16	16	25-90		20	35	1.0	TO-5	200
2N1144	16		16	16	16	34-90		20	40	1.0	R-32	175
2N1145	16		16	16	16	25-90		20	40	1.0	R-32	175
2N1175	35	10	25	30	12	70-140		20	40	1.5	TO-5	200
2N1175A	35	10	25	30	12	70-140		20	40	1.5	TO-5	200
2N1273	15	10	15	15	14	27-165		50			TO-5	250
2N1274	25	10	15	25	14	27-165		50			TO-5	250
2N1303	30	25	25	25	6	20		10	20	3.0	TO-5	150
2N1305	30	25	20	25	6	40-200		10	20	5.0	TO-5	150
2N1307	30	25	15	25	6	60-300		10	20	10.0	TO-5	150
2N1309	30	25	15	25	6	80		10	20	15.0	TO-5	150
2N1370	25	10	25	20	14	45-165		50		2.0	TO-5	225
2N1371	45	10	45	20	14	45-165		50		2.0	TO-5	250
2N1372	25	15	25	20	7	27-105		50		2.0	TO-5	250
2N1373	45	25	45	20	7	27-105		50		2.0	TO-5	250
2N1374	25	15	25	20	7	45-165		50		2.0	TO-5	250
2N1375	45	25	45	20	7	45-165		50		2.0	TO-5	250
2N1376	25	15	25	20	7	67-165		60		2.0	TO-5	250
2N1377	45	25	45	20	7	67-165		50		2.0	TO-5	250
2N1378	12	7	12	12	7	85-330		50		2.0	TO-5	250
2N1379	25	15	25	20	7	85-330		50		2.0	TO-5	250
2N1380	12	7	12	12	14	27-330		50		2.0	TO-5	250
2N1381	25	15	25	20	14	27-330		50		2.0	TO-5	250
2N1382	25	15	25	20	14	40-165		50		2.0	TO-5	250
2N1383	25	15	25	20	14	27-165		50		2.0	TO-5	250
2N1404	25	20		25	5	100		24	8	4.0	TO-5	150
2N1413	35	10	25	30	12	35-42		20	40	0.8	TO-5	200
2N1414	35	10	25	30	12	34-65		20	40	1.0	TO-5	200
2N1415	35	10	25	30	12	53-90		20	40	1.3	TO-5	200
2N1614	70	12	60	70	23	18-43		20	60	0.5	R-32	240
2N1924	60	25	40	45	10	34-65		20	30	1.0	TO-5	225
2N1925	60	25	40	45	10	53-90		20	30	1.3	TO-5	225
2N1926	60	25	40	45	10	72-121		20	30	1.5	TO-5	225
2N1997	45	45	40	45	25	40-200		100	20	3.0	TO-5	250
2N1998	35	30	35	35	25	70-225		100	20	5.6	TO-5	250
2N1999	30	20	20	30	25	100-350		100	20	10.0	TO-5	250
2N2000	50	20	15	30	10	50-300		100	35	2.0	TO-5	300
2N2001	30	20	15	15	6	100		100	35	6.0	TO-5	300
2N2042	105	75	105	105	25	20-50		5	25	0.5	TO-5	200
2N2043	105	75	105	105	25	400-100		5	25	0.75	TO-5	200
2N2374	35	35	35	35	5	100-300		100	14	15.0	TO-5	250
2N2375	35	35	35	35	5	35-110		100	20		TO-5	250
2N2376	35	35	35	35	5	35-110		100	20		TO-5	250

Downloaded from Alldatasheet.com

AMERICAN MICROSEMICONDUCTOR

CASE OUTLINE DRAWINGS & DIMENSIONS

NS257

Dimensions in mm

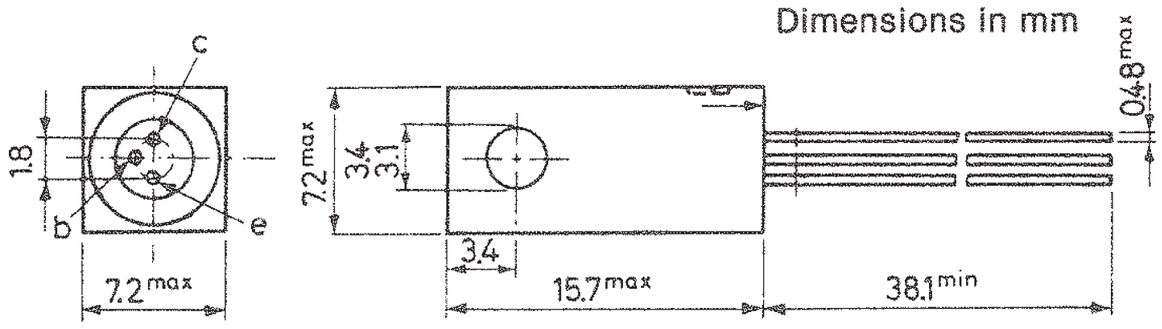

TO-18

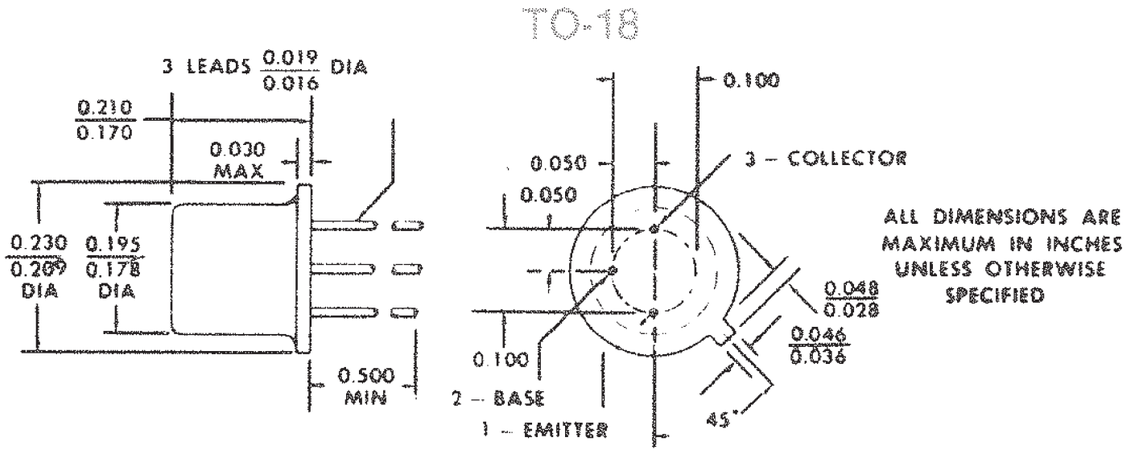

THE COLLECTOR IS ELECTRICAL CONTACT WITH THE CASE.

ALL JEDEC TO-18 DIMENSIONS AND NOTES ARE APPLICABLE.

TO-1

