NEOCENE 2H28A | SPECIFICATION

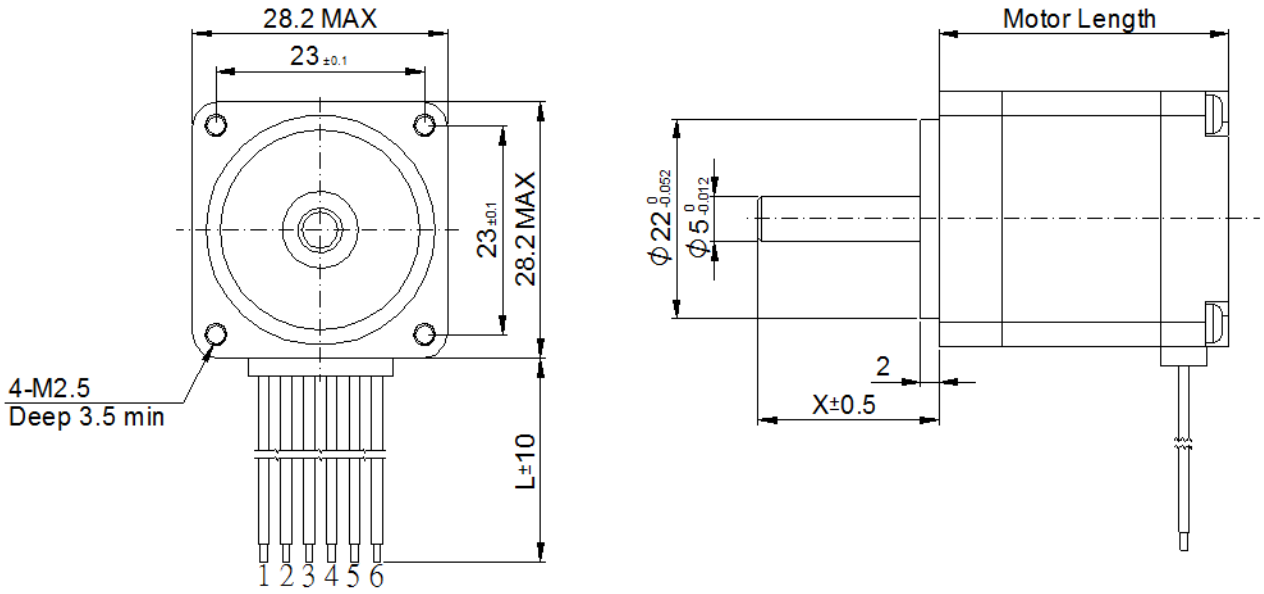

Model	2H28A(Bipolar)						
	Step Angle	Rated Voltage	Holding Torque	Rated Current	Winding Resistance	Inductance	Motor Length
	Deg	V	mN • m	A	Ω	mH	mm
2H28A7	1.8	2~36	60	0.67	5.6	3.4	32
2H28A8			95	0.67	6.8	4.9	44.5
2H28AB			120	0.67	9.2	7.2	51.5

Model	2H28A(Unipolar)						
	Step Angle	Rated Voltage	Holding Torque	Rated Current	Winding Resistance	Inductance	Motor Length
	Deg	V	mN • m	A	Ω	mH	mm
2H28A7	1.8	2~36	35	1.5	0.7	0.12	32
2H28A8			75	0.95	3.4	1.2	44.5
2H28AB			90	0.95	4.6	1.8	51.5