MICRODC
Industry Power Family

2E-XD&2F-XD Series

2W,FIXED INPUT,ISOLATED&UNREGULATED DUAL/SINGLE OUTPUT DC-DC CONVERTER



FEATURES

- High Efficiency up to 85%
- High Density, High Stability
- 3000VDC Isolation
- DIP14 Package
- Internal SMD construction
- No Heat sink Required
- Temperature Range: -40°C ~ +85°C
- No External Component Required
- Industry Standard Pinout
- RoHS Compliance
- 5V,12V and 24V input
- 3.3V,5V,9V,12V and 15V output

MODEL SELECTION

2E①05②05③X④ D⑤

①Product Series ②Input Voltage
③Output Voltage ④Fixed Input
⑤DIP14 Package

APPLICATIONS

The 2E-XD&2F-XD Series are specially designed for applications where a group of polar power supplies are isolated from the input power supply in a distributed power supply system on a circuit board.
These products apply to:
1) Where the voltage of the input power supply is fixed (voltage variation ≤ ±10%);
2) Where isolation is necessary between input and output (isolation voltage ≤3000VDC);
3) Where the regulation of the output voltage and the output ripple noise are not demanding.
Such as: purely digital circuits, ordinary low frequency analog circuits, and IGBT power device driving circuits.

RoHS MICRODC Green Technology
CE REACH

MICRODC RESERVES THE COPYRIGHT

PRODUCT PROGRAM

Part Number	Input		Output			Efficiency (%, Typ.)	Certificate
	Voltage (VDC)		Voltage (VDC)	Current (mA)			
	Nominal	Range		Max.	Min.		
2E0505XD	5	4.5-5.5	±5	±200	±20	82	UL C2E
2E0509XD			±9	±111	±12	83	UL C2E
2E0512XD			±12	±84	±9	84	UL C2E
2E0515XD			±15	±67	±7	82	UL CE
2F0503XD			3.3	400	40	74	--
2F0505XD			5	400	40	81	UL CE
2F0509XD			9	222	23	83	UL CE
2F0512XD			12	167	17	83	UL CE
2F0515XD			15	133	14	83	UL CE
2E1205XD	12	10.8-13.2	±5	±200	±20	80	UL CE
2E1209XD			±9	±111	±12	83	UL CE
2E1212XD			±12	±84	±9	85	UL CE
2E1215XD			±15	±67	±7	82	UL CE
2F1205XD			5	400	40	80	UL CE
2F1209XD			9	222	23	82	UL CE
2F1212XD			12	167	17	83	UL CE
2F1215XD			15	133	14	83	UL CE
2E2405XD	24	21.6-26.4	±5	±200	±20	82	UL CE
2E2409XD			±9	±111	±12	82	UL CE
2E2412XD			±12	±84	±9	85	UL CE
2E2415XD			±15	±67	±7	85	UL CE
2F2405XD			5	400	40	80	UL CE
2F2409XD			9	222	23	82	UL CE
2F2412XD			12	167	17	83	UL CE
2F2415XD			15	133	14	84	UL CE

ABSOLUTE MAXIMUM RATINGS

Item	Test conditions	Min.	Typ.	Max.	Units
Storage humidity range				95	%
Operating Temp. Range		-40		85	°C
Storage Temp. Range		-55		125	°C
Temp. rise at full load			15	25	°C
Lead temperature	1.5mm from case for 10 seconds			300	°C
Cooling		Free air convection			
Case material		Plastic (UL94-V0)			
Short circuit protection[1]				1	S
MTBF		3500			K hours
Weight			2.4		g

1.Supply voltage must be discontinued at the end of short circuit duration.

ISOLATION SPECIFICATIONS

Item	Test conditions	Min.	Typ.	Max.	Units
Isolation voltage	Tested for 1 minute and 1 mA max	3000			VDC
Isolation resistance	Test at 500VDC	1000			MΩ

OUTPUT SPECIFICATIONS

Item	Test conditions		Min.	Typ.	Max.	Units
Output power			0.2		2	W
Line regulation	For Vin change of ±1%	(3.3V output)			±1.5	%
		(Others output)			±1.2	%
Load regulation	10% to 100% load	(3.3V output)		12	20	%
		(5V output)		10	15	%
		(9V output)		8.3	10	%
		(12V output)		6.8	10	%
		(15V output)		6.3	10	%
Output voltage accuracy			See tolerance envelope graph			
Temperature drift	100% full load				±0.03	%/℃
Ripple& Noise*	20MHz Bandwidth			75	150	mVp-p
Switching frequency	Full load, nominal input			70		KHz

*Test ripple and noise by "parallel cable" method.
See detailed operation instructions at Testing of Power Converter section, application notes.
Note: Dual output models unbalanced load: ±5%.

TYPICAL CHARACTERISTICS

Tolerance Envelope Graph

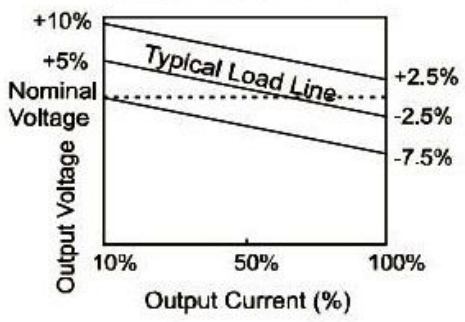

Temperature Derating Graph

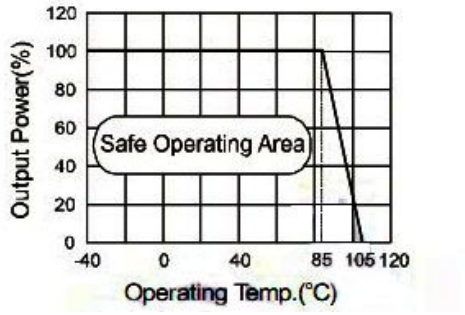

APPLICATION NOTE

Requirement on output load

To ensure this module can operate efficiently and reliably, During operation, the minimum output load is not less than 10% of the full load, and that this product should never be operated under no load! If the actual output power is very small, please connect a resistor with proper resistance at the output end in parallel to increase the load, or use our company's products with a lower rated output power (E_XD-1W/F_XD-1W Series).

Recommended circuit

If you want to further decrease the input/output ripple, an "LC" filtering network may be connected to the input and output ends of the DC/DC converter, see (Figure 1).
It should also be noted that the inductance and the frequency of the "LC" filtering network should be staggered with the DC/DC frequency to avoid mutual interference. However, the capacitance of the output filter capacitor must be proper. If the capacitance is too big, a startup problem might arise. For every channel of output, provided the safe and reliable operation is ensured, the recommended capacitance of its filter capacitor sees (Table 1).

Output Voltage Regulation and Over-voltage Protection Circuit

The simplest device for output voltage regulation, over-voltage and over-current protection is a linear voltage regulator with overheat protection that is connected to the input or output end in series (Figure 2).

Overload Protection

Under normal operating conditions, the output circuit of these products has no protection against overload. The simplest method is to connect a self-recovery fuse in series at the input end or add a circuit breaker to the circuit.

No parallel connection or plug and play.

RECOMMENDED CIRCUIT

Dual Output

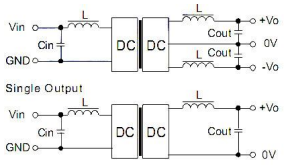

(Figure 1)

Dual Output

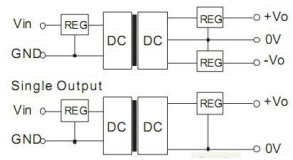

(Figure 2)

EXTERNAL CAPACITOR TABLE (TABLE 1)

Vin (VDC)	Cin (uF)	Single Vout (VDC)	Cout (uF)	Dual Vout (VDC)	Cout (uF)
5	4.7	3.3/5	10	±5	4.7
12	2.2	9	4.7	±9	2.2
24	1	12	2.2	±12	1
-	-	15	1	±15	1

It's not recommended to connect any external capacitor in the application field with less than 0.5 watt output.

OUTLINE DIMENSIONS & PIN CONNECTIONS

MECHANICAL DIMENSIONS 2

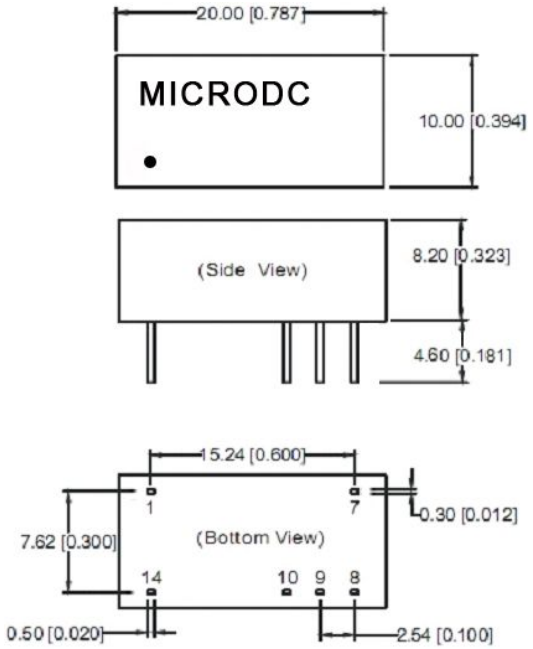

Note:
Unit:mm[inch]
Pin section tolerances: 0.10mm[0.004inch]
General tolerances: 0.25mm[0.010inch]

FOOTPRINT DETAILS

SERIES	F-XD	E-XD
Pin	Single	Dual
1	GND	GND
7	NC	NC
8	+Vo	+Vo
9	No Pin	0V
10	0V	-Vo
14	Vin	Vin

NC: No connection

RECOMMENDED FOOTPRINT

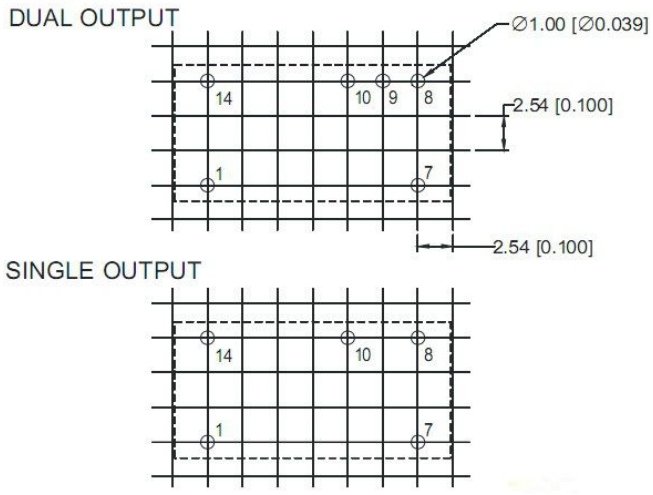

TUBE OUTLINE DIMENSIONS

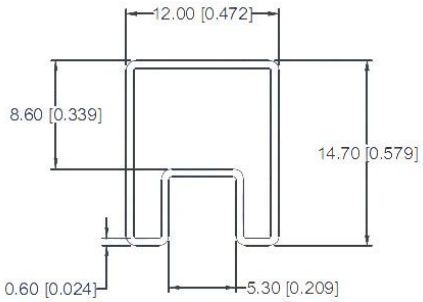

Note:
Unit :mm(inch)
General tolerances: ±0.50mm(±0.020inch)
L=530mm(20.866inch) Tube Quantity: 25pcs
L=220mm(8.661inch) Tube Quantity: 10pcs

The length of the tube can be set according to the customer.

Note:
1. Operation under minimum load will not damage the converter; However, they may not meet all specification listed.
2. All specifications measured at Ta=25°C, humidity<75%, nominal input voltage and rated output load unless otherwise specified.
3. In this datasheet, all the test methods of indications are based on corporate standards.
4. Only typical models listed, other models may be different, please contact our technical person for more details.

MICRODC Industry Power Family

Microdc Professional Power Module,Inc.

Tel:0086-20-86000646 E-mail:tech@microdc.cn

Website:http://www.microdc.cn

Microdc Professional Power module,Inc.makes no representation that the use of its products in the circuits described herein, or the use of other technical information contained herein, will not infringe upon existing or future patent rights. Specifications are subject to change without notice.
© 2010 Microdc Professional Power Module, Inc. Guangzhou

RoHS COMPLIANT INFORMATION
This series is compatible with RoHS soldering systems with a peak wave solder temperature of 300°C for 10 seconds.
The pin termination finish on the SIP package type is Tin Plate, Hot Dipped over Matte Tin with Nickel Preplate. The DIP types are Matte Tin over Nickel Preplate. Both types in this series are backward compatible with Sn/Pb soldering systems.

REACH COMPLIANT INFORMATION

This series has proven that this product does not contain harmful chemicals, it also has harmful chemical substances through the registration, inspection and approval.