CML INNOVATIVE TECHNOLOGIES
WHERE INNOVATION COMES TO LIGHT

2990P Series Non-Relampable Incandescent Indicator Lights

DESCRIPTION AND FEATURES

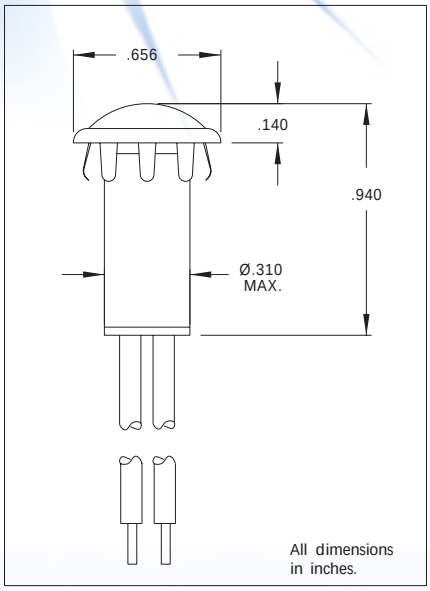

Mounting: Ø.500 MIN.

Wire Leads: No.24 AWG 4.40/4.80 long, stripped .430/.570

Lens: Polycarbonate

Bezel: Mirror finish chrome plated steel

Lens Color	Incandescent	
	Model No. (12V)	Model No. (28V)
Red	2990P1-12V	2990P1-28V
Amber	2990P3-12V	2990P3-28V
White	2990P4-12V	2990P4-28V
Green	2990P5-12V	2990P5-28V
Blue	2990P6-12V	2990P6-28V
Lamp used	#2162	#2187
Lead color	Yellow	Purple
Mounting	Plug-button bezel	

Underwriters Laboratories (UL) File No. E20325
Canadian Standards Association (CSA) File No. LR13346

CML INNOVATIVE TECHNOLOGIES
WHERE INNOVATION COMES TO LIGHT

America:
CML Innovative Technologies,Inc.
147 Central Avenue
Hackensack, NJ 07601 -USA
Tel:1-201-489 -8989
Fax:1-201-489 -6911
e-mail:americas@cml-it.com

Europe:
CML Technologies GmbH &Co.KG
Robert-Bunsen-Str.1
67098 Bad Dürkheim -GERMANY
Tel:+49 (0)6322 9567-0
Fax:+49 (0)6322 9567-88
e-mail:europe@cml-it.com

Asia:
CML Innovative Technologies,Inc.
61 Aida Street
Singapore 459975
Tel:(65)9630 -5003
e-mail:asia@cml-it.com

CML-IT reserves the right to make specification revisions that enhance the design and/or performance of the product