RoHS MAXI® Fuse Slo-Blo® Type Fuse

The MAXI Fuse is available in a higher range of amperage ratings (20–80 amperes) than the MINI® Fuse and ATO® Fuse designs and is larger in physical size. A typical MAXI Fuse application in today's more sophisticated automobile circuits is protection of the wiring harness by replacing the fusible wire or fusible link, which is often a plain piece of small wire.



ELECTRICAL CHARACTERISTICS:

% of Ampere Rating	Ampere Rating	Opening Time
135%	20–60	60 sec., **Min.**; 1800 sec., **Max.**
	70–80	60 sec., **Min.**; 3600 sec., **Max.**
200%	20	4 sec., **Min.**; 20 sec., **Max.**
	30	6 sec., **Min.**; 30 sec., **Max.**
	40	8 sec., **Min.**; 40 sec., **Max.**
	50	10 sec., **Min.**; 50 sec., **Max.**
	60	15 sec., **Min.**; 60 sec., **Max.**
	70–80	4 sec., **Min.**; 60 sec., **Max.**
350%	20	.7 sec., **Min.**; 2 sec., **Max.**
	30	1 sec., **Min.**; 4 sec., **Max.**
	40	1.4 sec., **Min.**; 5 sec., **Max.**
	50	1.7 sec., **Min.**; 6 sec., **Max.**
	60	2 sec., **Min.**; 7 sec., **Max.**
	70–80	.2 sec., **Min.**; 2 sec., **Max.**
600%	20	.15 sec., **Min.**; 1 sec., **Max.**
	30–60	.20 sec., **Min.**; 1 sec., **Max.**
	70–80	.04 sec., **Min.**; .15 sec., **Max.**

AGENCY APPROVALS: Recognized under the components program of Underwriters Laboratories.

DESIGN STANDARD: SAE (Society of Automotive Engineers) J1888.

PHYSICAL SPECIFICATIONS:
Materials: Body: Plastic
Terminations: Silver-Plated

PATENTED

INTERRUPTING RATING:
1000A @ 32VDC

ORDERING INFORMATION:

Catalog Number	Ampere Rating (A)	Voltage Rating (VDC)	Body Color Code	Nominal Cold Resistance Ohms	Minimum Melting I^2t (A^2 Sec.)
299 020	20	32	Yellow	0.0031	1100
299 025	25	32	Gray	0.0024	2087
299 030	30	32	Green	0.0020	4070
299 035	35	32	Brown	0.0017	6032
299 040	40	32	Orange	0.0014	8450
299 050	50	32	Red	0.0011	11300
299 060	60	32	Blue	0.00089	15300
299 070	70	32	Tan	0.00064	6900
299 080	80	32	Natural	0.00054	8800

Reference Dimensions

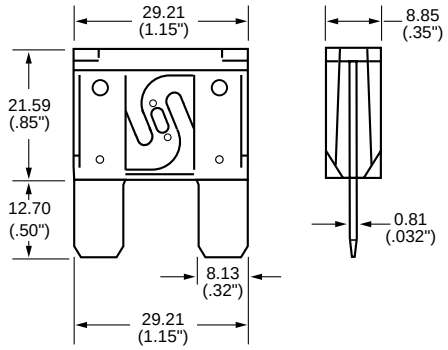

Average Time Current Curves

