Electronic housing - EMH 25-LG - 2944122

Please be informed that the data shown in this PDF Document is generated from our Online Catalog. Please find the complete data in the user's documentation. Our General Terms of Use for Downloads are valid (http://download.phoenixcontact.com)



Electronic housing, for PCB insertion, without screw connection terminal blocks

Key commercial data

Packing unit	1 PCE
GTIN	4 017918 081447
Weight per Piece (excluding packing)	34.89 GRM
Custom tariff number	85369010
Country of origin	Germany

Classifications

eCl@ss

eCl@ss 4.0	27180401
eCl@ss 4.1	27180401
eCl@ss 5.0	27180506
eCl@ss 5.1	27180506
eCl@ss 6.0	27180802
eCl@ss 7.0	27182702
eCl@ss 8.0	27182702

ETIM

ETIM 2.0	EC001031
ETIM 3.0	EC001031
ETIM 4.0	EC001031
ETIM 5.0	EC001031

Electronic housing - EMH 25-LG - 2944122

Classifications

UNSPSC

UNSPSC 6.01	31261501
UNSPSC 7.0901	31261501
UNSPSC 11	31261501
UNSPSC 12.01	31261501
UNSPSC 13.2	31261501

Accessories

Accessories

Printed circuit board terminal

PCB terminal block - FRONT 2,5-H/SA10 - 1700040



PCB terminal block, Nominal current: 24 A, Nom. voltage: 400 V, Pitch: 5 mm, Number of positions: 1, Connection method: Screw connection, Mounting: Soldering, Conductor/PCB connection direction: 0 °, Color: green, The article can be aligned to create different nos. of positions!

Marking material - EMG-GKS 12 - 2947035



Equipment marker, width 12 mm

Spacer plate - EMH 25-ZE60 - 2944740

Intermediate element, EMH 25-ZE 60, for the electronics housing. The intermediate element is 60 mm high.

Marking material - EMG-GKS 12 - 2947035



Equipment marker, width 12 mm

Electronic housing - EMH 25-LG - 2944122

Drawings

Dimensioned drawing

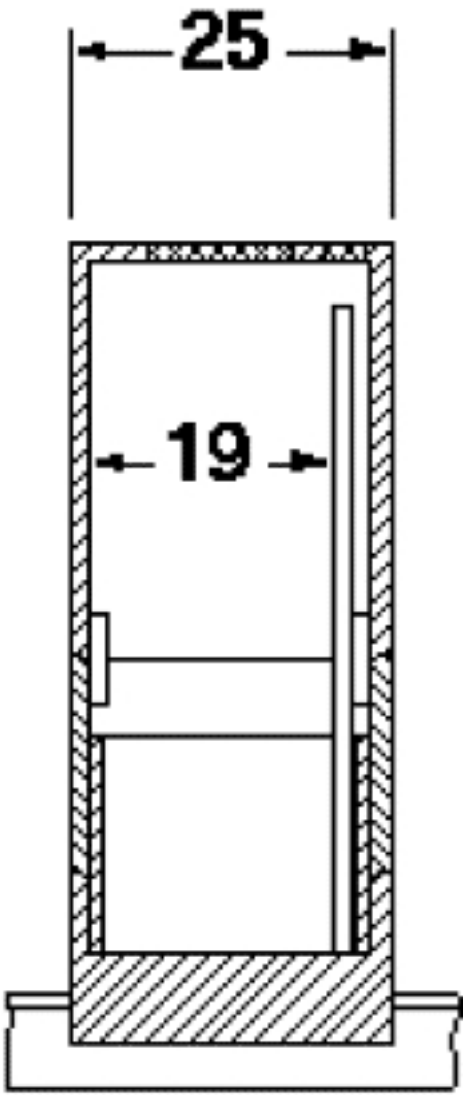

Electronic housing - EMH 25-LG - 2944122

Dimensioned drawing

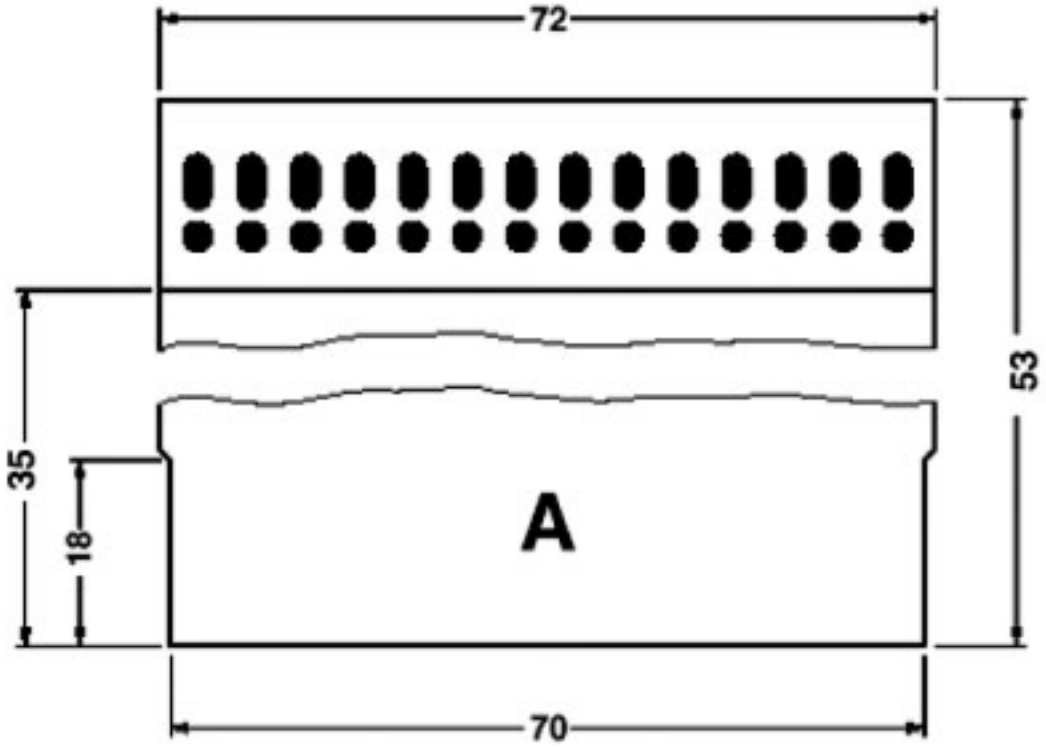

Soldering side of the PCB
A = overall component area

Electronic housing - EMH 25-LG - 2944122

Dimensioned drawing

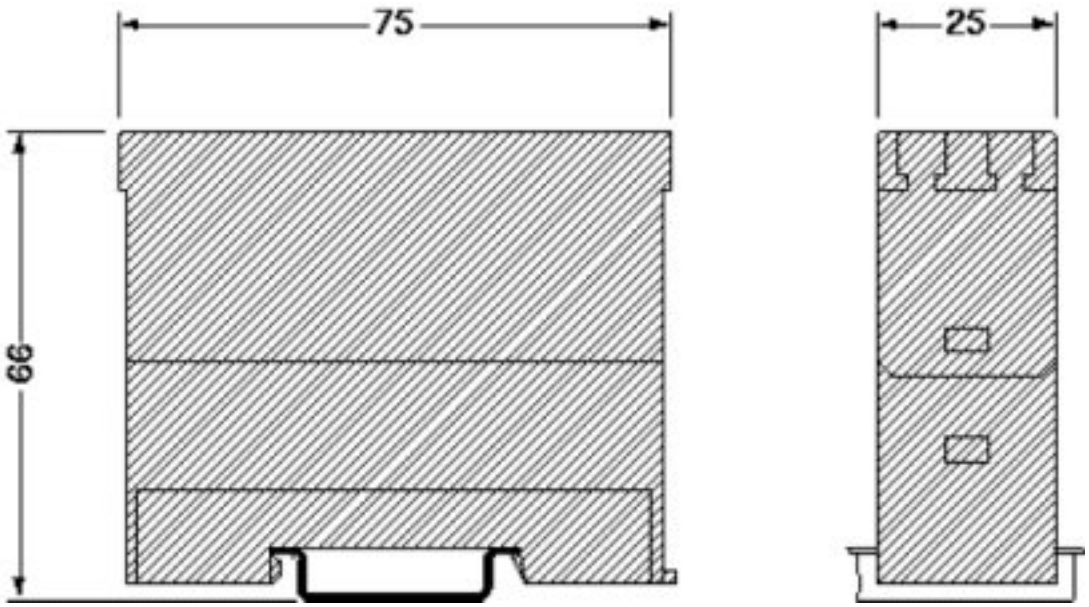

Electronic housing - EMH 25-LG - 2944122

Dimensioned drawing

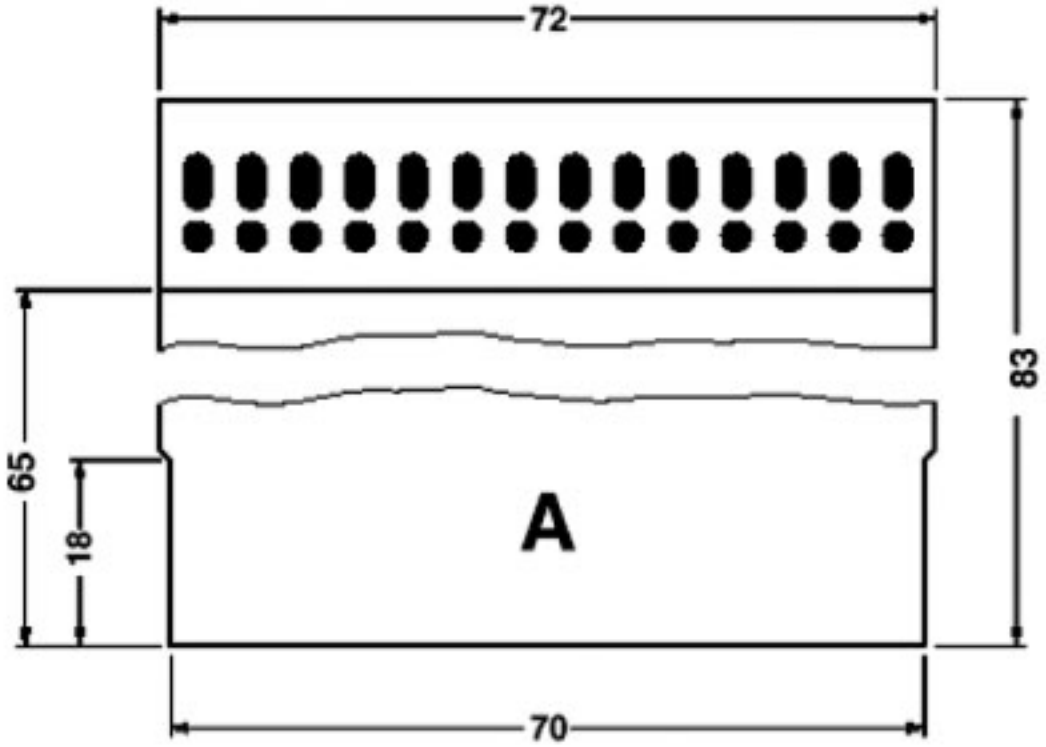

Soldering side of PCB layout
A = Overall component area on EMH 25-LG, with intermediate element EMH 25-ZE 30

Electronic housing - EMH 25-LG - 2944122

Dimensioned drawing

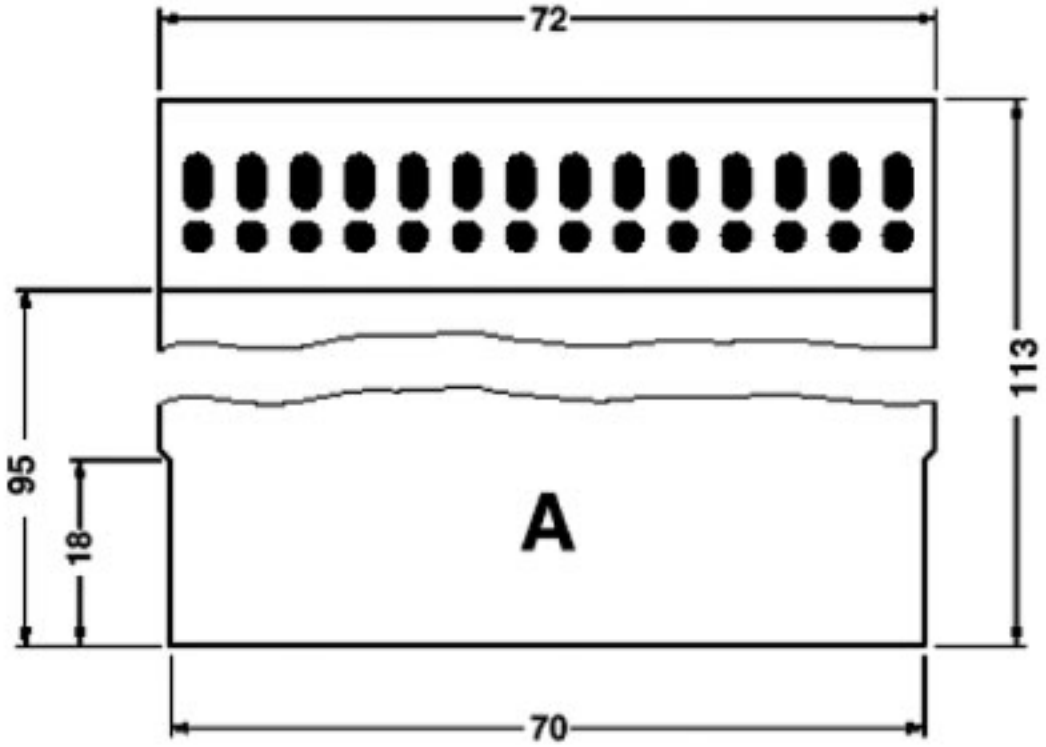

Soldering side of PCB layout
A = Overall component area on EMH 25-LG, with intermediate element EMH 25-ZE 60

Electronic housing - EMH 25-LG - 2944122

Dimensioned drawing

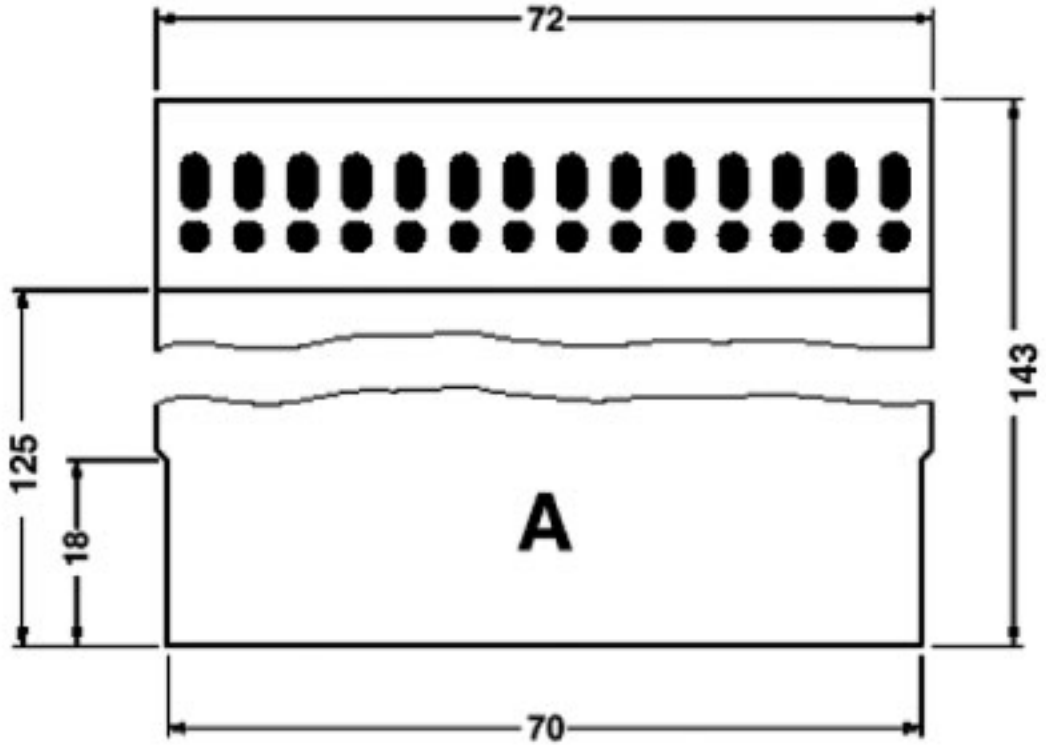

Soldering side of PCB layout
A = overall component area on EMH 25-LG, with intermediate elements EMH 25-ZE 30 and EMH 25-ZE 60

© Phoenix Contact 2013 - all rights reserved
http://www.phoenixcontact.com