2943

HIGH-CURRENT HALF-BRIDGE MOTOR DRIVER

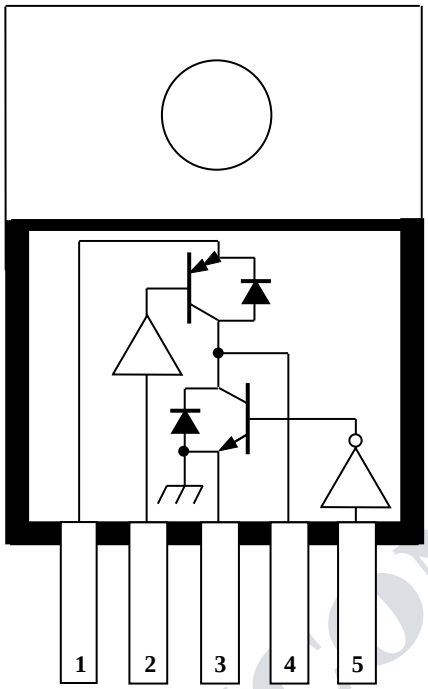

Dwg. PP-022-1

ABSOLUTE MAXIMUM RATINGS

Supply Voltage, Range V_S .... **8.5 V to 35 V***
Output Voltage, $V_{CE(sus)}$ ..... **24 V**
Input Voltage Range, V_{IN} .... **-0.3 V to +18 V**
Continuous Output Current, I_{OUT} ..... **±1.0 A**
Package Power Dissipation,
P_D ..... **See Graph**
Operating Temperature Range,
T_A ..... **-20°C to +85°C**
Storage Temperature Range,
T_S ..... **-55°C to +150°C**

*Internal high-voltage shutdown above 24 V.

Designed for use as a general-purpose motor driver, the UDN2943Z half-bridge driver combines high-current sink and source drivers with logic stages, level shifting, diode transient protection, and a voltage regulator for single-supply operation. Capable of operating in extremely harsh environments, this device can withstand high ambient temperatures, output overloads, and repeated power supply transient voltages without damage. The driver can be used in pairs for full-bridge operation, or as triplets in three-phase brushless dc motor-drive applications.

The input circuitry is compatible with TTL, low-voltage CMOS, and NMOS logic. Logic lockout prevents both source and sink drivers from turning ON simultaneously. Each driver is turned ON by an active-low input, making the UDN2943Z especially desirable in many micro-processor applications. An accidental input open circuit will turn OFF the corresponding output. The device also provides an internally-generated dead time to prevent crossover currents during output switching. Monolithic, space-saving construction offers reliability unobtainable with discrete components.

Saturated output drivers provide for low saturation voltage at the maximum rated current. Internal short-circuit protection, activated at load currents above 1 A, protects the source driver from accidental short-circuits between the output and ground.

The UDN2943Z driver is rated for continuous operation with inductive loads at supply voltages of up to 24 V. With supply voltage transients (to 35 V maximum), a high-voltage protection circuit becomes operative, shutting OFF both output drivers. The internal thermal shutdown is triggered by a nominal junction temperature of 160°C.

Single-chip construction and a 5-lead power-tab TS-001 plastic package provide cost-effective and reliable systems designs. It also features excellent power dissipation ratings, minimum size, and ease of installation. The heat-sink tab is at ground potential and does not require insulation.

FEATURES

- ±1 A Output Current
- Saturated Output Drivers
- Logic-Compatible Inputs
- Output-Transient Protection
- Tri-State Output
- 8.5 V to 24 V Operating Range
- Crossover-Current Protected
- Withstands 35 V Supply Transients
- Internal Over-Voltage Protection
- Internal Short-Circuit Protection

Always order by complete part number: **UDQ2943Z** .

DISCONTINUED PRODUCT
FOR REFERENCE ONLY

FUNCTIONAL BLOCK DIAGRAM

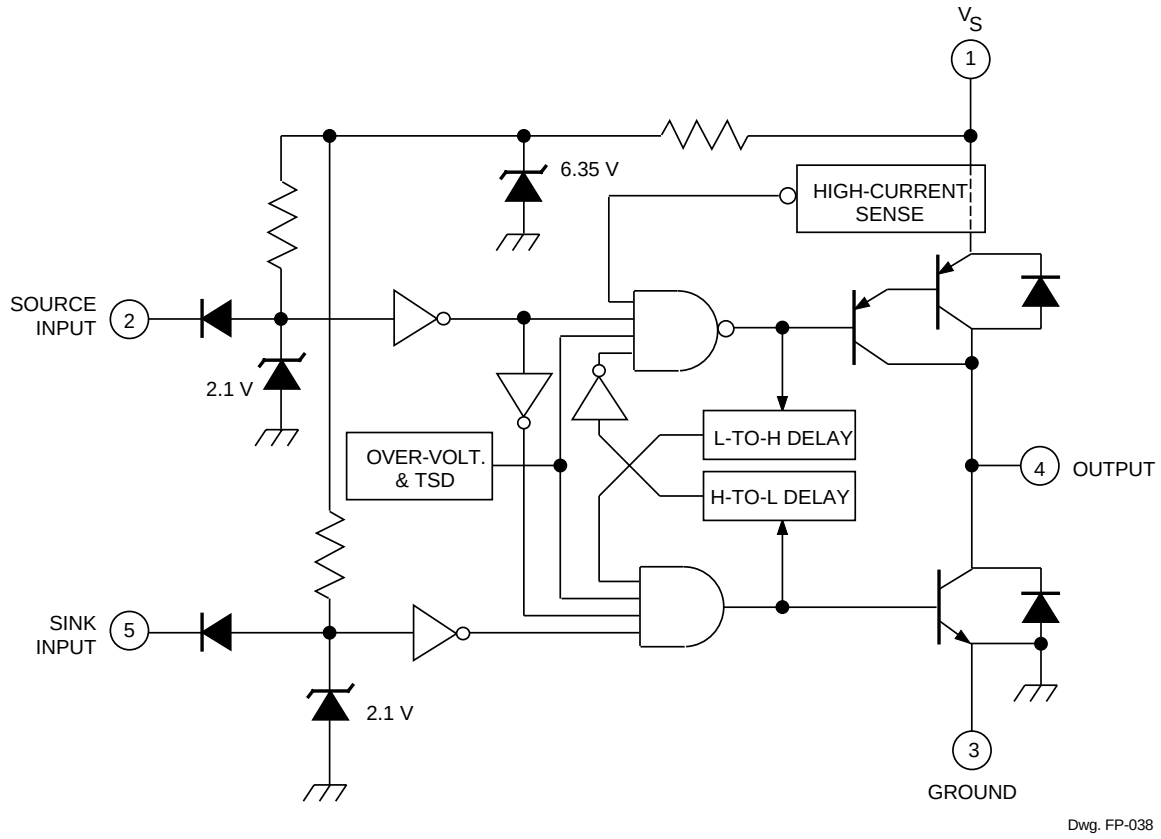

Dwg. FP-038

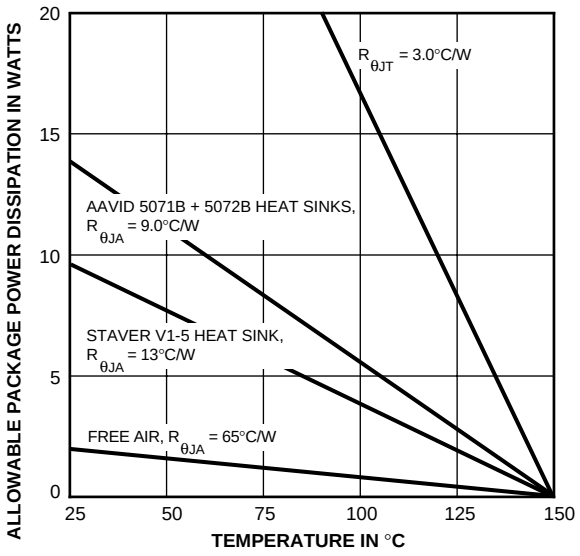

Dwg. GP-014A

LOGIC TRUTH TABLE

Source Driver Pin 2	Sink Driver Pin 5	Output Pin 4
Low	Low	High
Low	High	High
High	Low	Low
High	High	High Z

115 Northeast Cutoff, Box 15036
Worcester, Massachusetts 01615-0036 (508) 853-5000
Copyright © 1986, 1994, Allegro MicroSystems, Inc.

ELECTRICAL CHARACTERISTICS at T_A = +25°C, V_S = +24 V (unless otherwise noted).

Characteristic	Symbol	Source Driver Input, Pin 2	Sink Driver Input, Pin 5	Output Pin 4	Other	Limits			
						Min.	Typ.	Max.	Units
Output Leakage Current	I_{CEX}	2.4 V	2.4 V	0 V	—	—	-10	-100	µA
(V_S = +35 V)		2.4 V	2.4 V	35 V	—	—	10	100	µA
Output Sustaining Voltage	$V_{CE(sus)}$	2.4 V	0.8 to 2.4 V	1.0 A	Fig. 1A	24	—	—	V
		0.8 to 2.4 V	2.4 V	-1.0 A	Fig. 1B	24	—	—	V
Output Saturation Voltage	$V_{CE(SAT)}$	0.8 V	2.4 V	-1.0 A	—	—	1.2	1.8	V
		2.4 V	0.8 V	1.0 A	—	—	0.6	1.0	V
Short-Circuit Source Current	I_{SC}	0.8 V	2.4 V	0 V	—	1.0	—	1.8	A
Logic Input Voltage	$V_{IN(1)}$	—	—	—	—	2.0	—	—	V
	$V_{IN(0)}$	—	—	—	—	—	—	0.8	V
Input Current	$I_{IN(1)}$	2.4 V	2.4 V	NC	—	—	10	100	µA
	$I_{IN(0)}$	0.8 V	0.8 V	NC	—	—	-50	-200	µA
Clamp Diode Forward Voltage	V_F	NC	NC	1.0 A	Fig. 2	—	1.5	2.0	V
Logic Supply Current	I_S	2.4 V	2.4 V	NC	—	—	15	30	mA
		2.4 V	0.8 V	NC	—	—	55	75	mA
		0.8 V	2.4 V	NC	—	—	30	40	mA
Thermal Shutdown Temperature	T_J	—	—	—	—	—	160	—	°C
Over-Voltage Shutdown	V_S	—	—	—	—	24	—	35	V
Propagation Delay	t_{PD}	2.4 V	2.4 V to 0.8 V	0.4 A	Fig. 3	—	0.6	—	µs
		0.8 to 2.4 V	2.4 V	-0.4 A	Fig. 4	—	1.0	—	µs
		2.4 V	0.8 to 2.4 V	0.4 A	Fig. 3	—	1.1	—	µs
		2.4 to 0.8 V	2.4 V	-0.4 A	Fig. 4	—	0.6	—	µs

Notes: Negative current is defined as coming out of (sourcing) the specified device pin.
Typical Data is for design information only.



Dwg. WP-024

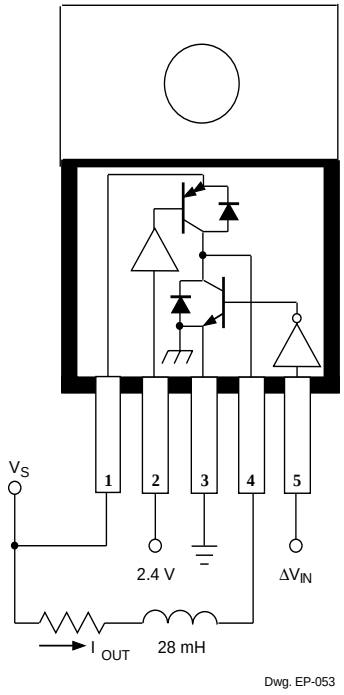

Figure 1A

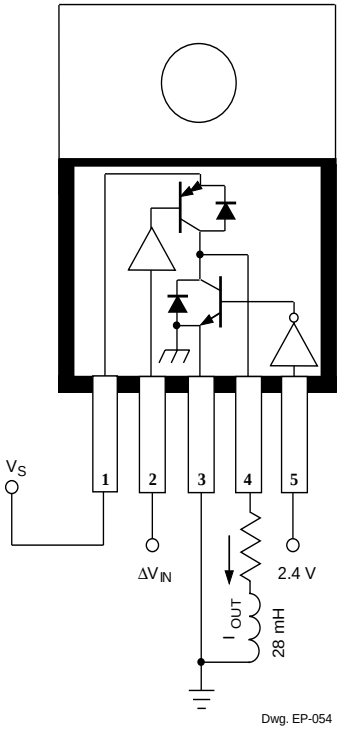

Figure 1B

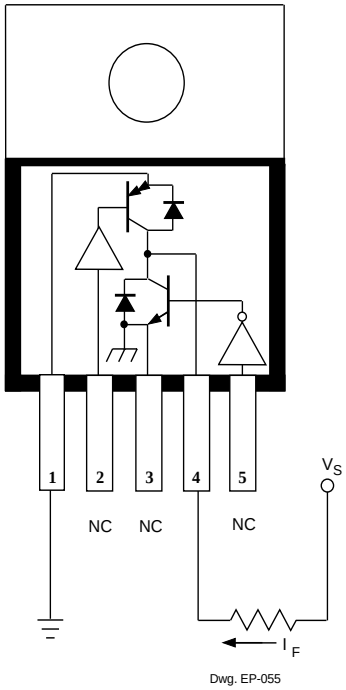

Figure 2

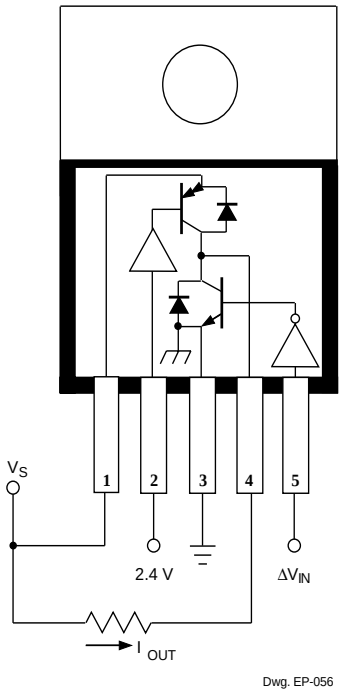

Figure 3

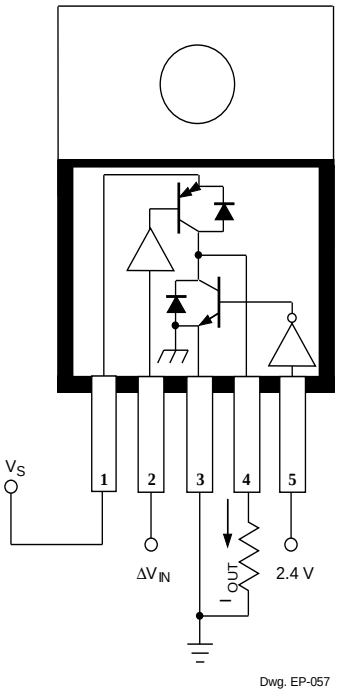

Figure 4

Allegro™ MicroSystems, Inc.
115 Northeast Cutoff, Box 15036
Worcester, Massachusetts 01615-0036 (508) 853-5000

Dimensions in Inches

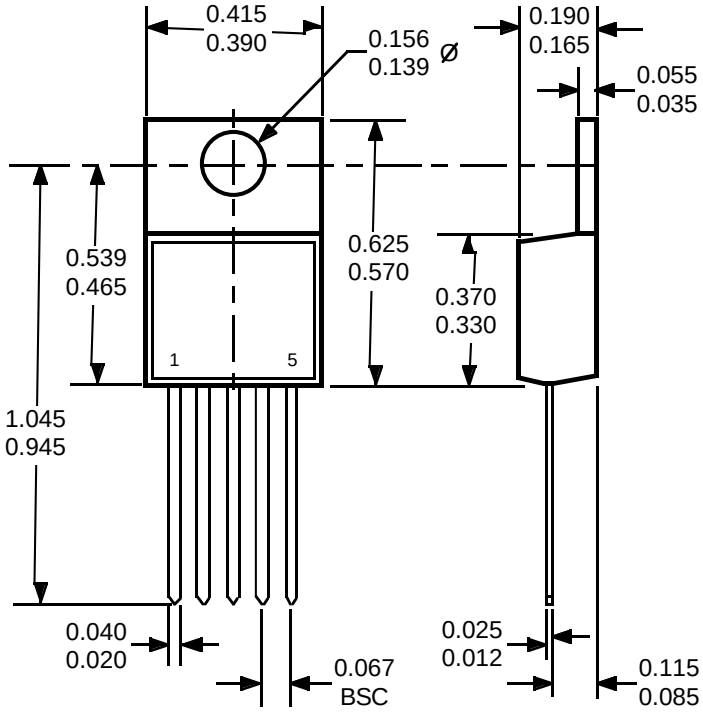

Dwg. MP-005 in

Dimensions in Millimeters
(Based on 1" = 25.40 mm)

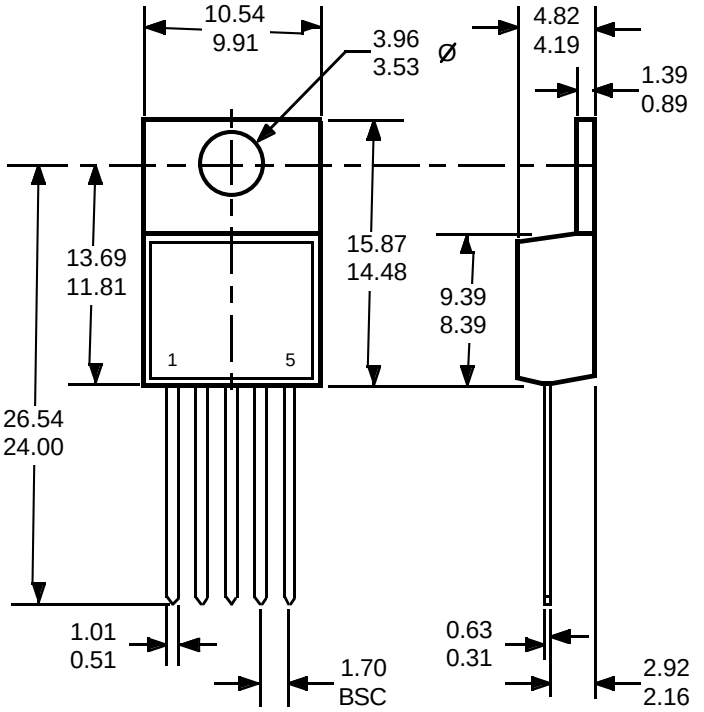

Dwg. MP-005 mm

2943
HIGH-CURRENT HALF-BRIDGE MOTOR DRIVER

MOTOR DRIVERS SELECTION GUIDE

Function	Output Ratings *		Part Number †
INTEGRATED CIRCUITS FOR BRUSHLESS DC MOTORS			
3-Phase Controller/Drivers	±2.0 A	45 V	2936 and 2936-120
Hall-Effect Latched Sensors	10 mA	24 V	3175 and 3177
2-Phase Hall-Effect Sensor/Controller	20 mA	25 V	3235
Hall-Effect Complementary Output Sensor	20 mA	25 V	3275
2-Phase Hall-Effect Sensor/Driver	900 mA	14 V	3625
2-Phase Hall-Effect Sensor/Driver	400 mA	26 V	3626
Hall-Effect Comp. Output Sensor/Driver	300 mA	60 V	5275
3-Phase Back-EMF Controller/Driver	±900 mA	14 V	8902–A
3-Phase Controller/DMOS Driver	±4.0 A	14 V	8925
3-Phase Back-EMF Controller/Driver	±1.0 A	7 V	8980 and 8983
INTEGRATED BRIDGE DRIVERS FOR DC AND BIPOLAR STEPPER MOTORS			
PWM Current Controlled Dual Full Bridge	±750 mA	45 V	2916
PWM Current Controlled Dual Full Bridge	±1.5 A	45 V	2917
PWM Current Controlled Dual Full Bridge	±1.5 A	45 V	2918
PWM Current Controlled Dual Full Bridge	±750 mA	45 V	2919
Half-Bridge Driver	±1.0 A	24 V	2943
Dual Full Bridge Driver	±2.0 A	50 V	2998
PWM Current Controlled Full Bridge	±2.0 A	50 V	3952
PWM Current Controlled Full Bridge	±1.3 A	50 V	3953
PWM Current Controlled Dual Full Bridge	±800 mA	45 V	3961
PWM Current Controlled Dual Full Bridge	±800 mA	30 V	3962
OTHER INTEGRATED CIRCUIT MOTOR DRIVERS			
Unipolar Stepper Motor Quad Driver	1.8 A	50 V	2544
Unipolar Stepper-Motor Translator/Driver	1.25 A	50 V	5804
Unipolar Stepper-Motor Quad Driver	1 A	46 V	7024 and 7029
Unipolar Microstepper-Motor Quad Driver	1.2 A	46 V	7042
Voice-Coil Motor Driver	±500 mA	6 V	8932-A
Voice-Coil Motor Driver	±800 mA	16 V	8958
Voice-Coil (and spindle) Motor Driver	±350 mA	7 V	8980 and 8983

* Current is maximum specified test condition, voltage is maximum rating. See specification for sustaining voltage limits or over-current protection voltage limits.
Negative current is defined as coming out of (sourcing) the output.

† Complete part number includes additional characters to indicate operating temperature range and package style.

Allegro MicroSystems, Inc. reserves the right to make, from time to time, such departures from the detail specifications as may be required to permit improvements in the design of its products. Components made under military approvals will be in accordance with the approval requirements.

The information included herein is believed to be accurate and reliable. However, Allegro MicroSystems, Inc. assumes no responsibility for its use; nor for any infringements of patents or other rights of third parties which may result from its use.

Allegro™ MicroSystems, Inc.

115 Northeast Cutoff, Box 15036
Worcester, Massachusetts 01615-0036 (508) 853-5000