THIS DRAWING IS UNPUBLISHED. RELEASED FOR PUBLICATION 20
© COPYRIGHT 20 BY - ALL RIGHTS RESERVED.

LOC	DIST
AL	2

REVISIONS

P	LTR	DESCRIPTION	DATE	DWN	APVD
	G	UPDATED HV-4 POLARIZATION KEY	21AUG2009	AV	GT
	G1	ADDED COMPONENT PART NUMBERS	10NOV2009	AV	GT
	G2	REVISED PER ECR-13-009678	18SEP2013	RS	DD
	G3	ECR-16-004670	04APR2016	RS	JL

TYPICAL APPLICATION

SECTION A-A

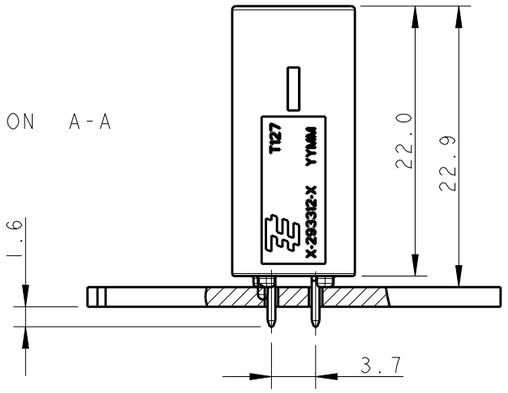

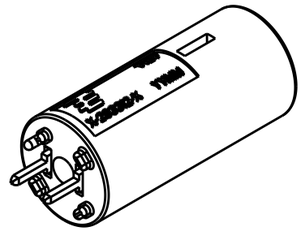

⚠1 OBSOLETE.

PRINTED CIRCUIT BOARD LAYOUT FOR LOW VOLTAGE VERSION

TOLERANCES UNLESS OTHERWISE SPECIFIED ± 0.05
PRINTED CIRCUIT BOARD THICKNESS: 1.6 mm NOMINAL

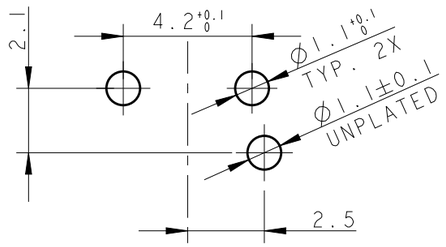

PRINTED CIRCUIT BOARD LAYOUT FOR HIGH VOLTAGE VERSION

TOLERANCES UNLESS OTHERWISE SPECIFIED ± 0.05
PRINTED CIRCUIT BOARD THICKNESS: 1.6 mm NOMINAL

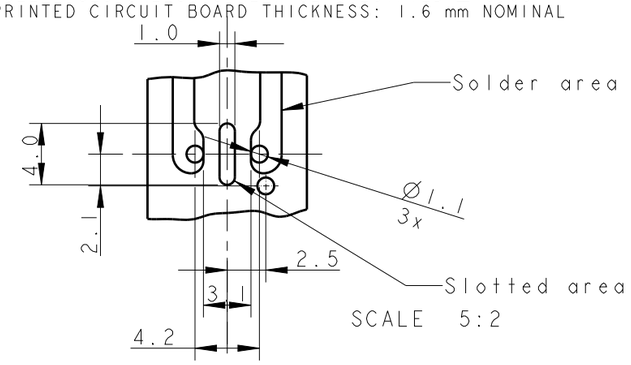

HIGH VOLTAGE

KEYING HV-1 KEYING HV-2 KEYING HV-3 KEYING HV-4

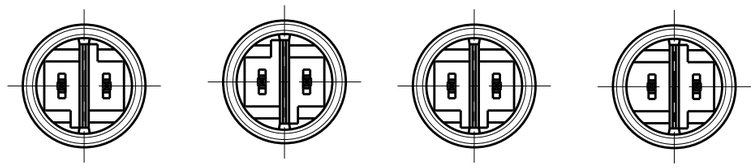

LOW VOLTAGE

KEYING LV-1 KEYING LV-2

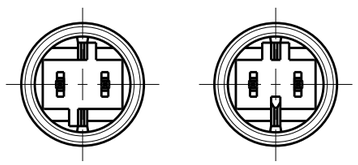

KEYING	REMARKS	PART NUMBER	CTC. FINISH SURFACE	COLOR
HV-4	HIGH-VOLT 250 V AC	1-293313-2	GOLD	BLACK
HV-4	HIGH-VOLT 250 V AC	1-293313-1	GOLD	WHITE
HV-1	HIGH-VOLT 250 V AC	1-293313-0	GOLD	BLACK
HV-1	HIGH-VOLT 250 V AC	293313-9	GOLD	WHITE
HV-2	SWITCH-KEYING	293313-8	TIN	RED
HV-4	HIGH-VOLT 250 V AC	293313-7	TIN	BLACK
HV-4	HIGH-VOLT 250 V AC	293313-6	TIN	WHITE
LV-2	LOW-VOLT 42 V DC	293313-5	TIN	YELLOW
LV-1	LOW-VOLT 42 V AC	293313-4	TIN	LIGHT GREY
HV-3	HIGH-VOLT 125 V AC	293313-3	TIN	BLUE
HV-1	HIGH-VOLT 250 V AC	293313-2	TIN	BLACK
HV-1	HIGH-VOLT 250 V AC	293313-1	TIN	WHITE

THIS DRAWING IS A CONTROLLED DOCUMENT.

DIMENSIONS: mm

TOLERANCES UNLESS OTHERWISE SPECIFIED:
0 PLC ±-
1 PLC ±0.3
2 PLC ±0.1
3 PLC ±-
4 PLC ±-
ANGLES ±0.5°

MATERIAL -
FINISH -

DWN R. FRABONI 21JUN2007
CHK J. SALO 11FEB2008
APVD I. BAILIO 11FEB2008
PRODUCT SPEC 108-94018
APPLICATION SPEC 114-32102
WEIGHT -

TE Connectivity

NAME 7.5 mm PCB CONNECTOR ASSEMBLY STRAIGHT MALE VERSION -

SIZE	CAGE CODE	DRAWING NO	RESTRICTED TO
A3	00779	C-293313	-

CUSTOMER DRAWING | SCALE 5:1 | SHEET 1 OF 1 | REV G3

Mouser Electronics

Authorized Distributor

Click to View Pricing, Inventory, Delivery & Lifecycle Information:

TE Connectivity:
293313-6