ROHS COMPLIANT

PRODUCT DATA DRAWING

REVISION HISTORY			
REV	DESCRIPTION	DATE	APPROVED
-	NRN 44847	05/20	BNK

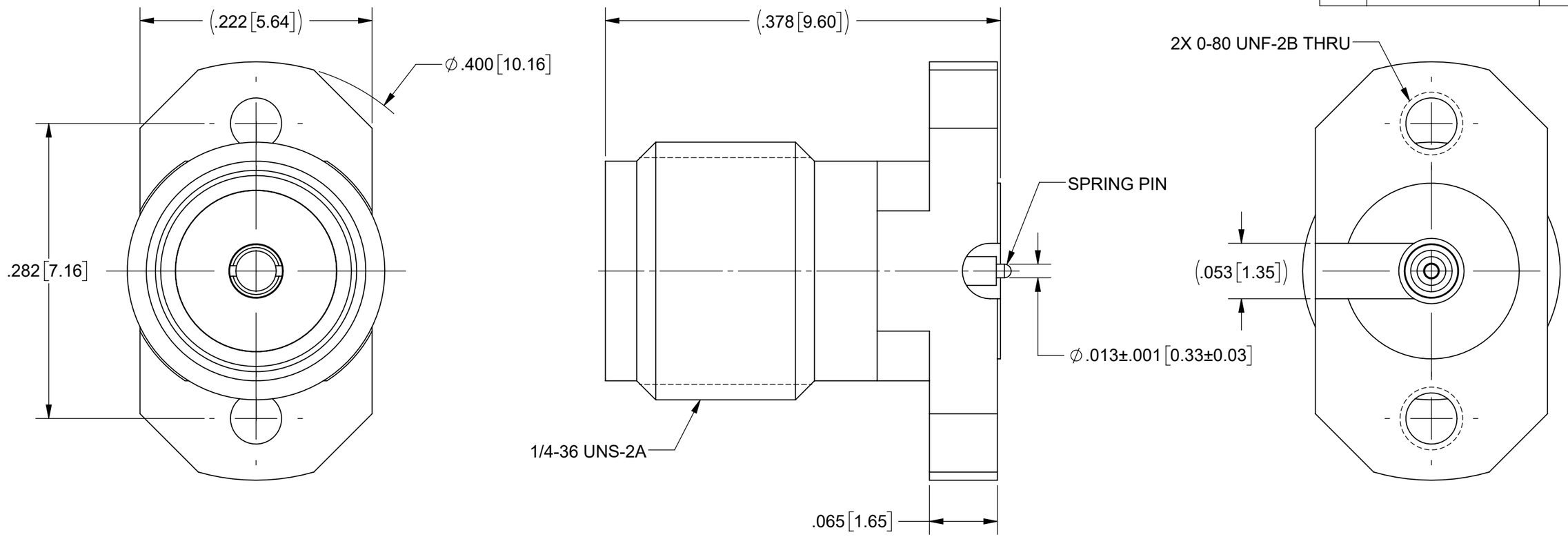

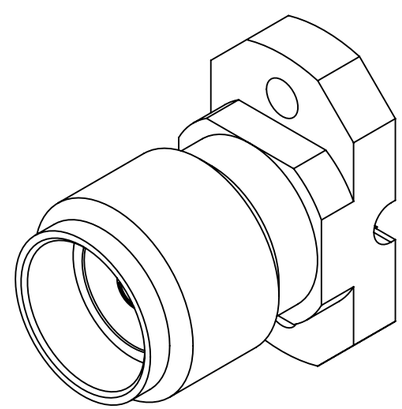

SV P/N	DESCRIPTION	PCB THICKNESS
2921-40050	NO SCREWS	.005 TO .373
2921-40050-1S	INCL. TWO .188 SCREWS	.033 TO .123

MATERIAL:

BODY & CONTACTS: BERYLLIUM COPPER PER ASTM B196, ALLOY No. UNS C17300, TD04

INSULATOR: PTFE PER ASTM D1710, TYPE I, GRADE 1, CLASS B

SCREWS: BRASS

FINISH:

BODY, CONTACTS & SCREWS: GOLD PER ASTM B488, TYPE I, CODE C, CLASS .51, OVER COPPER PER MIL-C-14550, CLASS 4, .00005" MIN.

PERFORMANCE:

IMPEDANCE: 50 OHMS
FREQ. RANGE: DC TO 18 GHz

NOTES:

1. FOR RECOMMENDED FOOTPRINT FOR YOUR PCB, CONTACT SV MICROWAVE SALES DEPARTMEMT (sales@svmicro.com, 561-840-1800).

MATERIAL: SEE NOTES
FINISH: SEE NOTES
SURFACE AREA: N/A

PROPRIETARY

THE INFORMATION CONTAINED IN THIS DRAWING IS THE SOLE PROPERTY OF SV MICROWAVE, INC. ANY REPRODUCTION IN PART OR AS A WHOLE WITHOUT THE WRITTEN PERMISSION OF SV MICROWAVE, INC IS PROHIBITED.

DIMENSIONS ARE IN INCHES TOLERANCES:
FRACTIONAL: ±1/64 ANGULAR: X° ±1°0' X°X' ±15'
DECIMAL: .X ±.030 .XX ±.010 .XXX ±.005

INTERPRET DIMENSIONS AND TOLERANCES PER ASME Y14.5M - 1994

THIRD ANGLE PROJECTION

UNLESS OTHERWISE SPECIFIED
1) ALL DIMENSIONS ARE IN INCHES [MILLIMETERS]
2) ALL DIMENSIONS ARE AFTER PLATING.
3) BREAK CORNERS & EDGES .005 R. MAX.
4) CHAM. 1ST & LAST THREADS.
5) SURFACE ROUGHNESS 63 MIL-STD-10.
6) DIA. S ON COMMON CENTERS TO BE CONCENTRIC WITHIN .005 T.I.R.
7) REMOVE ALL BURRS

DRAWN:	JPM 05/19/20	
CHECKED:	BNK 05/19/20	
APPROVED:	BNK 05/19/20	

Amphenol SV MICROWAVE
www.svmicrowave.com

TITLE: SMA F NON-MAGNETIC LITE TOUCH CONNECTOR FOR CPW/MICROSTRIP

SIZE B | DWG. NO. 2921-40050-XS

SCALE: 10:1 | SHEET 1 OF 1