Mounting base housing - ME 22,5 F-UT TBUS KMGY - 2914835

Please be informed that the data shown in this PDF Document is generated from our Online Catalog. Please find the complete data in the user's documentation. Our General Terms of Use for Downloads are valid (http://phoenixcontact.com/download)



DIN rail housing, Lower housing part with metal foot catch, flat design, with vents, width: 22.6 mm, height: 99 mm, depth: 84.8 mm, cross connection: DIN rail connector (optional), number of positions cross connector: 5, color: light gray (7035)

Your advantages

- Item is from the ME product range
- Tool-free mounting
- Available in overall widths from 12.5 mm to 90 mm, modular extension is possible
- Inflammability class V0 according to UL 94
- Variety of connection technologies
- Can be mounted on the DIN rail
- Optional bus connector that is either integrated or mounted on the DIN rail

Key Commercial Data

Packing unit	10 pc
GTIN	4 017918 964603
GTIN	4017918964603

Technical data

Item properties

Brief article description	Mounting base housing
Type	ME 22,5 F-UT TBUS KMGY
Order No.	2914835
Housing type	DIN rail housing
Type	Lower housing part with metal foot catch, flat design
Max. IP code to attain	IP20
Mounting type	DIN rail mounting
Ventilation openings present	yes

Dimensions

Mounting base housing - ME 22,5 F-UT TBUS KMGY - 2914835

Technical data

Dimensions

Width [w]	22.6 mm
Height [h]	99 mm
Depth [d]	84.8 mm
Depth from top edge of DIN rail [d]	77.3 mm
Depth from top edge of DIN rail to support point on upper part [d]	46 mm

Material data

Housing material	Polyamide
Color (RAL)	light gray (7035)
Flammability rating according to UL 94	V0

Ambient conditions

Ambient temperature (storage/transport)	-40 °C ... 55 °C
Ambient temperature (assembly)	-5 °C ... 100 °C
Ambient temperature (operation)	-40 °C ... 105 °C (depending on power dissipation)
Relative humidity (storage/transport)	80 %

PCB data

Number of PCB holders	1
PCB thickness	1.4 mm ... 1.8 mm
Mounting position	Vertical (horizontal DIN rail)
Type of PCB mount	Latching

Power dissipation, single housing at 20 °C

Ambient temperature	20 °C
Reduction factor	1
Mounting position	vertical
Power dissipation	5.9 W

Power dissipation, single housing at 30 °C

Ambient temperature	30 °C
Reduction factor	0.91
Mounting position	vertical
Power dissipation	5.4 W

Power dissipation, single housing at 40 °C

Ambient temperature	40 °C
Reduction factor	0.81
Mounting position	vertical
Power dissipation	4.8 W

Power dissipation, single housing at 50 °C

Ambient temperature	50 °C
Reduction factor	0.7
Mounting position	vertical

Mounting base housing - ME 22,5 F-UT TBUS KMGY - 2914835

Technical data

Power dissipation, single housing at 50 °C

Power dissipation	4.1 W

Power dissipation, single housing at 60 °C

Ambient temperature	60 °C
Reduction factor	0.57
Mounting position	vertical
Power dissipation	3.35 W

Mechanical strength/tumbling barrel

Specification	IEC 60998-1:2002-12
Height of fall	50 cm
Number of drop cycles	10

Vibration test

Specification	IEC 60068-2-6:2007-12
Frequency	10 - 150 - 10 Hz
Sweep speed	1 octave/min
Amplitude	0.15 mm (10 - 58.1 Hz)
Acceleration	2g (58.1 - 150 Hz)
Test duration per axis	2.5 h
Test directions	X-, Y- and Z-axis

Shock

Specification	IEC 60068-2-27:2008-02
Pulse shape	Half-sine
Acceleration	15g
Shock duration	11 ms
Number of shocks per direction	3
Test directions	X-, Y- and Z-axis (pos. and neg.)

Thermostability (Ball Thrust Test)

Specification	IEC 60695-10-2:2014-02
Temperature	125 °C
Test duration	1 h
Force	20 N

Test for assessing the risk of fire (glow wire)

Specification	DIN EN 60695-2-11 (VDE 0471-2-11):2014-11
Temperature	850 °C
Time of exposure	30 s

Degrees of protection provided by housings (IP code)

Specification	IEC 60529:1989-11 + AMD 1:1999-11 + AMD 2:2013-08
Result, degree of protection, IP code	IP20

Mounting base housing - ME 22,5 F-UT TBUS KMGY - 2914835

Technical data

General information

Type of note	Assembly instruction:
Note	Refer to the data sheet for the range in the download area.
Type of note	Recommendation
Note	Material of contact pads for bus connector, galvanic gold (hard gold)

Packaging information

Type of packaging	packed in cardboard
Pieces per package	10
Denomination packing units	Pcs.
Outer packaging type	Carton

Standards and regulations

Flammability rating according to UL 94	V0

Environmental Product Compliance

China RoHS	Environmentally friendly use period: unlimited = EFUP-e
	No hazardous substances above threshold values

Drawings

Mounting base housing - ME 22,5 F-UT TBUS KMGY - 2914835

Dimensional drawing

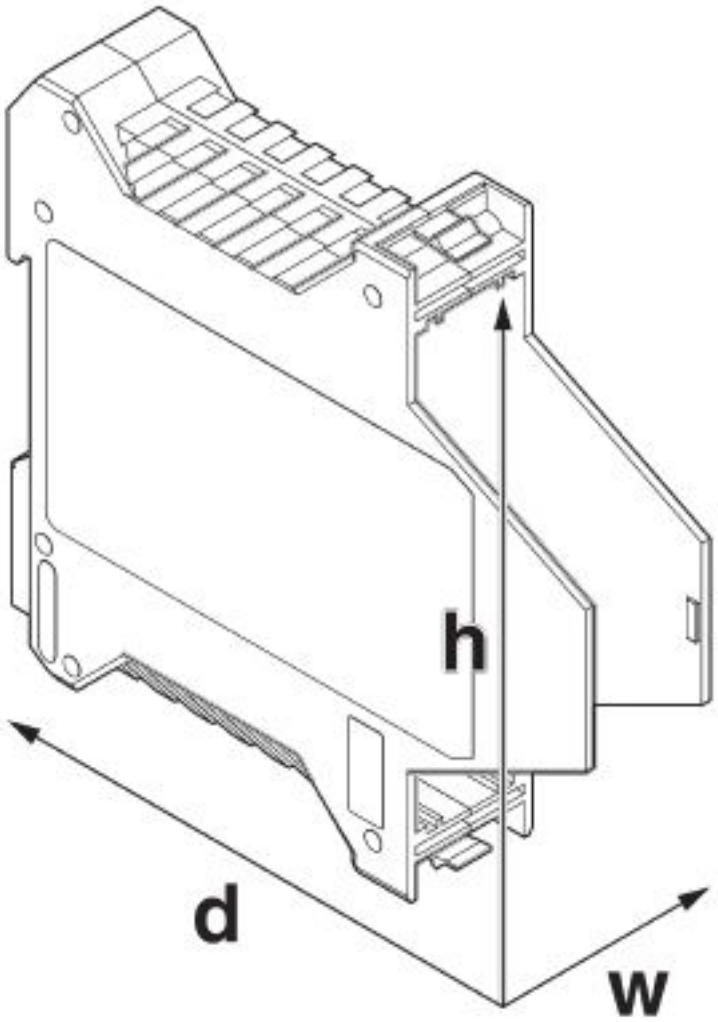

Classifications

eCl@ss

eCl@ss 10.0.1	27182702
eCl@ss 4.0	27180400
eCl@ss 4.1	27180400
eCl@ss 5.0	27180500
eCl@ss 5.1	27180500
eCl@ss 6.0	27180800
eCl@ss 7.0	27182702
eCl@ss 8.0	27182702
eCl@ss 9.0	27182702

Mounting base housing - ME 22,5 F-UT TBUS KMGY - 2914835

Classifications

ETIM

ETIM 2.0	EC001031
ETIM 3.0	EC001031
ETIM 4.0	EC001031
ETIM 5.0	EC001031
ETIM 6.0	EC001031
ETIM 7.0	EC001031

UNSPSC

UNSPSC 6.01	31261501
UNSPSC 7.0901	31261501
UNSPSC 11	31261501
UNSPSC 12.01	31261501
UNSPSC 13.2	31261501
UNSPSC 18.0	31261501
UNSPSC 19.0	31261501
UNSPSC 20.0	31261501
UNSPSC 21.0	31261501

Accessories

Accessories

Device marking

Label for ME ... F-UT ... TBUS ... housing - EML (44X49)R-ME - 0828169



Label for ME ... F-UT ... TBUS ... housing, Roll, white, unlabeled, can be labeled with: THERMOMARK ROLLMASTER 300/600, THERMOMARK X1.2, THERMOMARK ROLL X1, THERMOMARK ROLL 2.0, THERMOMARK ROLL, mounting type: adhesive, lettering field size: 44 x 49 mm

Mounting material

PCB stop - ME LPZS - 2906911



DIN rail housing, PCB stop, color: silver

Mounting base housing - ME 22,5 F-UT TBUS KMGY - 2914835

Accessories

Base latch - ME MF 17,5 - 2908281



Metal foot catch, for intermediate elements.

Shield connection clamp - ME-SAS - 2853899



Shield connection clamp for printed circuit terminal block

Necessary add-on products

Upper part of housing - ME 22,5 OT-MSTBO KMGY - 2907761



DIN rail housing, Upper housing part for connectors with header, width: 22.6 mm, height: 99 mm, depth: 45.85 mm, color: light gray (7035)

Upper part of housing - ME 22,5 OT-FKDSO KMGY - 2200323



DIN rail housing, Upper housing part for PCB terminal blocks with Push-in spring connection, width: 22.6 mm, height: 99 mm, depth: 45.85 mm, color: light gray (7035)

Upper part of housing - ME 22,5 OT-MKDSO KMGY - 2908469



DIN rail housing, Upper housing part for PCB terminal blocks with screw connection, width: 22.6 mm, height: 99 mm, depth: 45.85 mm, color: light gray (7035)

Mounting base housing - ME 22,5 F-UT TBUS KMGY - 2914835

Accessories

Upper part of housing - ME 22,5 OTU-MKDSO KMGY - 2278953



DIN rail housing, Upper housing part for PCB terminal blocks with screw connection, width: 22.6 mm, height: 99 mm, depth: 45.85 mm, color: light gray (7035)

Upper part of housing - ME 22,5 OT-1MSTBO KMGY - 2914877



DIN rail housing, Upper housing part for connectors with header, width: 22.6 mm, height: 99 mm, depth: 45.85 mm, color: light gray (7035)

Upper part of housing - ME 22,5 OT-3MSTBO KMGY - 2914880



DIN rail housing, Upper housing part for connectors with header, width: 22.6 mm, height: 102 mm, depth: 60.15 mm, color: light gray (7035)

Upper part of housing - ME 22,5 OTP-MSTBO PS KMGY - 2279282



DIN rail housing, Upper housing part for connectors with header, width: 22.6 mm, height: 99 mm, depth: 45.85 mm, color: light gray (7035)

Upper part of housing - ME 22,5 OT-MKDSO SET KMGY - 2853734



DIN rail housing, Set consisting of upper housing part and connection technology, width: 22.6 mm, height: 99 mm, depth: 45.85 mm, color: light gray (7035)

Mounting base housing - ME 22,5 F-UT TBUS KMGY - 2914835

Accessories

Upper part of housing - ME 22,5 OT-MSTBO KMGY VPE200 - 2896801



DIN rail housing, Upper housing part for connectors with header, width: 22.6 mm, height: 99 mm, depth: 45.85 mm, color: light gray (7035)

Upper part of housing - ME 22,5 OT-MSTBO SET KMGY - 2709244



DIN rail housing, Set consisting of upper housing part and connection technology, width: 22.6 mm, height: 99 mm, depth: 45.85 mm, color: light gray (7035)

DIN rail bus connectors - ME 22,5 TBUS 1,5/ 5-ST-3,81 KMGY - 2713722



DIN rail connector, nominal current: 8 A, rated voltage (III/2): 125 V, number of positions: 5, pitch: 3.81 mm, color: light gray, contact surface: Gold, mounting: DIN rail, Item with gold-plated contacts, bus connectors for connecting with electronics housings, 5 parallel contacts

DIN rail bus connectors - ME 22,5 TBUS 1,5/4P1S KMGY - 2201732



DIN rail connector, nominal current: 8 A, rated voltage (III/2): 50 V, number of positions: 5, pitch: 3.81 mm, color: light gray, mounting: DIN rail, Item with gold-plated contacts, bus connectors for connecting with electronics housings, 4 parallel contacts/1 serial contact

DIN rail bus connectors - ME 22,5 TBUS ADAPTER KMGY - 2201756



DIN rail bus adapter for ME and ME-MAX, design width: 22.5 mm, 5 parallel positions, color: light gray (similar to RAL 7035)

Phoenix Contact 2020 © - all rights reserved
http://www.phoenixcontact.com

PHOENIX CONTACT GmbH & Co. KG
Flachsmarktstr. 8
32825 Blomberg
Germany
Tel. +49 5235 300
Fax +49 5235 3 41200
http://www.phoenixcontact.com