DIMENSIONS:	
A	3.438" ±0.063
B	4.300" ±0.125
C	4.125" ±0.063
D	1.960" ±0.063
E	2.750" ±0.063
F	3.438" ±0.063

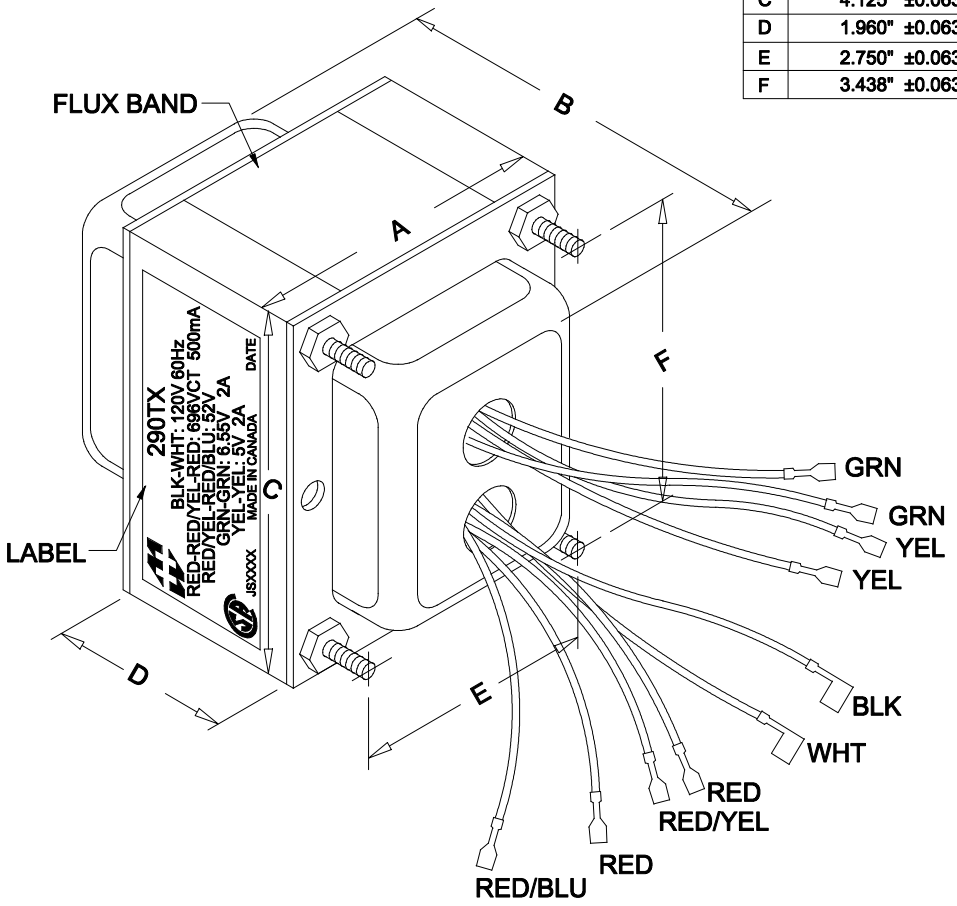

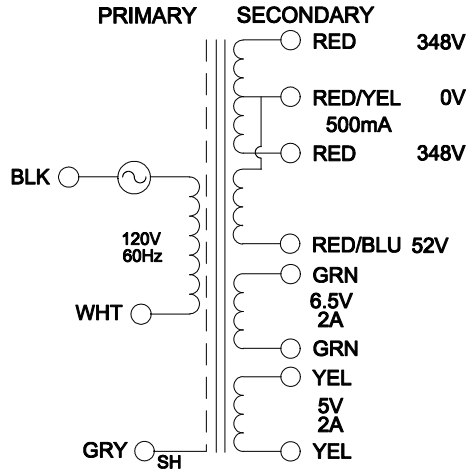

NOTE: ALL LEADS 12" OUT MIN.

ELECTRICAL DATA:			
TESTS	CONDITIONS	ACCEPTANCE CRITERIA	
Iex	@ 120V, 60Hz, BLK - WHT	237mA	Max.
Sec. N.L.V	@ 120V, 60Hz, BLK - WHT		
	RED - RED =	747.9V	±2%
	RED - RED/YEL = RED/YEL - RED =	373.9V	±2%
	RED/YEL - RED/BLU =	57.85V	±2%
	YEL - YEL =	5.357V	±2%
	GRN - GRN =	6.964V	±2%
DCR	@ 20°C, BLK - WHT =	1.180 Ω	±20%
	@ 20°C, RED - RED =	46.16 Ω	±20%
	@ 20°C, RED/YEL - RED/BLU =	6.140 Ω	±20%
	@ 20°C, YEL - YEL =	0.070 Ω	±20%
	@ 20°C, GRN - GRN =	0.080 Ω	±20%
HIPOT	PRMARY - SECONDARY	2500V, 60Hz, 1 SEC	

REV.#	REVISION	DATE
0	RELEASED.	12/01/10

HAMMOND MANUFACTURING™
ELECTRONIC DIVISION
52 RANKIN PLACE,
WATERLOO, ONTARIO, N2J 3Z5
PH # (519) 886-6181
FAX # (519) 886-9540

DWG. BY: C. ILIE	CHK'D BY:	TITLE: 290TX TRANSFORMER	DWG. NO. 290TX
DATE: 12/01/10	APP'D. BY:		
	DIMENSIONS: IN(X) MM( )		