Loop-powered isolators - MACX MCR-SL-I-I-ILP-SP - 2905279

Please be informed that the data shown in this PDF Document is generated from our Online Catalog. Please find the complete data in the user's documentation. Our General Terms of Use for Downloads are valid (http://phoenixcontact.com/download)



Single-channel input loop-powered 2-way isolator with plug-in connection technology for the electrical isolation of analog signals. Input signal = output signal: 0(4) mA ... 20 mA. Push-in connection technology.

Product Description

Single-channel input-loop-powered 2-way isolator with plug-in connection technology for the electrical isolation and filtering of analog signals. The input-loop-powered isolator allows operation with active sensor technology with a supply voltage of 6 V DC to 30 V DC. The device is powered via the current loop of the sensor. Input signal = output signal: 0(4) mA to 20 mA. With push-in connection.

Key Commercial Data

Packing unit	1 STK
GTIN	4 046356 944397
GTIN	4046356944397

Technical data

Dimensions

Width	12.5 mm
Height	99 mm
Depth	114.5 mm

Ambient conditions

Ambient temperature (operation)	-40 °C ... 85 °C
Ambient temperature (storage/transport)	-40 °C ... 85 °C
Maximum altitude	< 2000 m
Permissible humidity (operation)	5 % ... 95 % (non-condensing)
Noise immunity	EN 61326-1

Input data

Signal input	Current input
Configurable/programmable	no

Loop-powered isolators - MACX MCR-SL-I-I-ILP-SP - 2905279

Technical data

Input data

Max. voltage input signal	< 30.5 V
Current input signal	0 mA ... 20 mA
	4 mA ... 20 mA
Input voltage limitation	30.5 V
Voltage dissipation	2.9 V (I = 20 mA)
Step response (10-90%)	5 ms (500 Ω load)

Output data

Signal output	Current output
Configurable/programmable	no
Max. voltage output signal	27.5 V
Current output signal	0 mA ... 20 mA
	4 mA ... 20 mA
Transmission Behavior	1:1 to input signal
Load/output load current output	≤ 1375 Ω (I = 20 mA)
Residual ripple	< 10 mV_{rms} (500 Ω load)

Power supply

Supply voltage range	no separate supply voltage necessary

Connection data

Conductor cross section solid min.	0.2 mm²
Conductor cross section solid max.	1.5 mm²
Conductor cross section flexible min.	0.2 mm²
Conductor cross section flexible max.	1.5 mm²
Conductor cross section AWG min.	24
Conductor cross section AWG max.	16
Stripping length	8 mm
Connection method	Push-in connection

General

No. of channels	1
Maximum transmission error	≤ 0.1 % (of final value)
Maximum temperature coefficient	≤ 0.002 %/K (of measured value / 100 Ω load)
Flammability rating according to UL 94	V0
Degree of pollution	2
Overvoltage category	II
Electromagnetic compatibility	Conformance with EMC directive
Housing material	PA 6.6
Color	green
Designation	Input/output/power supply
Electrical isolation	300 V_{rms} (Rated insulation voltage (overvoltage category II; degree of pollution 2, safe isolation as per EN 61010-1))

Loop-powered isolators - MACX MCR-SL-I-I-ILP-SP - 2905279

Technical data

General

	2.5 kV (50 Hz, 1 min., test voltage)
Conformance	CE-compliant, additionally EN 61326-1
ATEX	# II 3 G Ex nA IIC T4 Gc X
UL, USA/Canada	UL 61010 Listed
	Class I, Div. 2, Groups A, B, C, D T4
	Class I, Zone 2, Group IIC T4
SIL	3

Standards and Regulations

Electromagnetic compatibility	Conformance with EMC directive
Noise immunity	EN 61326-1
Flammability rating according to UL 94	V0
Conformance	CE-compliant, additionally EN 61326-1
ATEX	# II 3 G Ex nA IIC T4 Gc X
UL, USA/Canada	UL 61010 Listed
	Class I, Div. 2, Groups A, B, C, D T4
	Class I, Zone 2, Group IIC T4

Environmental Product Compliance

China RoHS	Environmentally Friendly Use Period = 50
	For details about hazardous substances go to tab “Downloads”, Category “Manufacturer's declaration”

Drawings

Block diagram

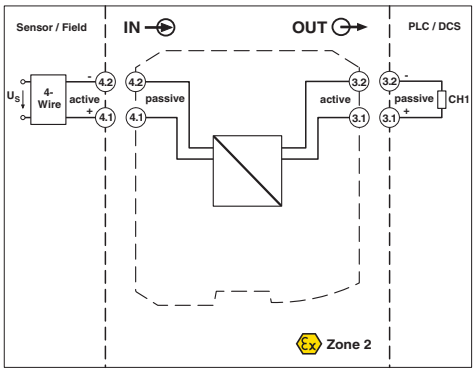

Pictogram

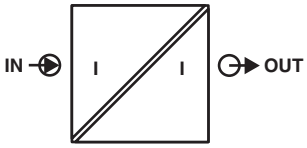

Approvals

Approvals

Loop-powered isolators - MACX MCR-SL-I-I-ILP-SP - 2905279

Approvals

Approvals

UL Listed / cUL Listed / Functional Safety / EAC / cULus Listed

Ex Approvals

UL Recognized / cUL Recognized / ATEX / cULus Recognized

Approval details

UL Listed	http://database.ul.com/cgi-bin/XYV/template/LISEXT/1FRAME/index.htm	FILE E 330267
cUL Listed	http://database.ul.com/cgi-bin/XYV/template/LISEXT/1FRAME/index.htm	FILE E 330267
Functional Safety		968/FSP 1200.00/15
EAC		RU C-DE.A*30.B.01082
cULus Listed		

Phoenix Contact 2018 © - all rights reserved
http://www.phoenixcontact.com

PHOENIX CONTACT GmbH & Co. KG
Flachsmarktstr. 8
32825 Blomberg
Germany
Tel. +49 5235 300
Fax +49 5235 3 41200
http://www.phoenixcontact.com