Solid-state relays - ST-OV3- 12DC/ 24DC/2 - 2905187

Please be informed that the data shown in this PDF Document is generated from our Online Catalog. Please find the complete data in the user's documentation. Our General Terms of Use for Downloads are valid (http://phoenixcontact.com/download)



The illustration shows version ST-OV 3- 5 DC/24 DC/2

Plug-in power solid-state relay, with LED and protective circuit in input and output circuits, input: 12 V DC, output: short-circuit-proof, 10 - 30 V DC/max. 2 A, can be plugged into basic terminal blocks

Key commercial data

Packing unit	1 pc
GTIN	4 017918 079321
Weight per Piece (excluding packing)	30.4 GRM
Custom tariff number	85364190
Country of origin	Germany

Technical data

Note

Utilization restriction	EMC: class A product, see manufacturer's declaration in the download area

Dimensions

Width	20.8 mm
Height	33 mm
Depth	66.5 mm

Ambient conditions

Ambient temperature (operation)	-20 °C ... 60 °C
Ambient temperature (storage/transport)	-20 °C ... 70 °C

Input data

Nominal input voltage U_N	12 V DC ±20 %

Solid-state relays - ST-OV3- 12DC/ 24DC/2 - 2905187

Technical data

Input data

Switching threshold "0" signal, voltage	≤ 4.2 V
Switching threshold "1" signal voltage	≥ 4.8 V
Typical input current at U_N	5 mA
Typical response time	17 µs
Typical turn-off time	104 µs
Status display	Yellow LED
Type of protection	Protection against polarity reversal
	Surge protection
Protective circuit/component	Polarity protection diode
Transmission frequency	1000 Hz

Output data

Output voltage range	10 V DC ... 30 V DC
Limiting continuous current	2 A (see derating curve)
Peak offstate voltage	35 V DC (Collector-emitter reverse voltage)
Voltage drop at max. limiting continuous current	1.5 V
Output circuit	3-conductor, ground-referenced
Status display	LED red
Type of protection	Protection against polarity reversal
	Free running
Protective circuit/component	Polarity protection diode
	Damping diode

General

Test voltage input/output	2.5 kV AC
Mounting position	any
Standards/regulations	DIN VDE 0110

Classifications

eCl@ss

eCl@ss 4.0	27371102
eCl@ss 4.1	27371102
eCl@ss 5.0	27371001
eCl@ss 5.1	27371001
eCl@ss 6.0	27371001
eCl@ss 7.0	27371001
eCl@ss 8.0	27371001

Solid-state relays - ST-OV3- 12DC/ 24DC/2 - 2905187

Classifications

ETIM

ETIM 2.0	EC001504
ETIM 3.0	EC001504
ETIM 4.0	EC001504
ETIM 5.0	EC001504

UNSPSC

UNSPSC 6.01	30211916
UNSPSC 7.0901	39121542
UNSPSC 11	39121542
UNSPSC 12.01	39121542
UNSPSC 13.2	39121542

Approvals

Approvals

Approvals

GOST / GOST

Ex Approvals

Approvals submitted

Approval details

GOST

GOST

Drawings

Solid-state relays - ST-OV3- 12DC/ 24DC/2 - 2905187

Diagram

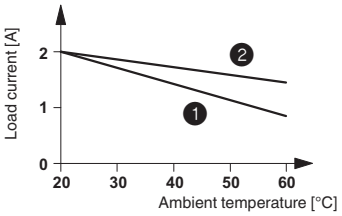

❶ In rows with zero spacing
❷ stand-alone device

Circuit diagram

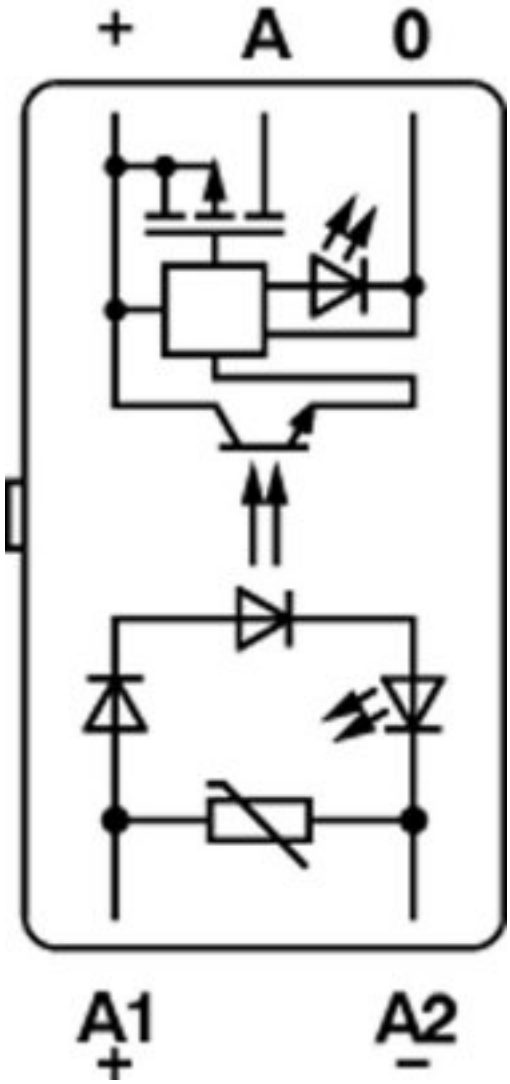

Solid-state relays - ST-OV3- 12DC/ 24DC/2 - 2905187

Circuit diagram

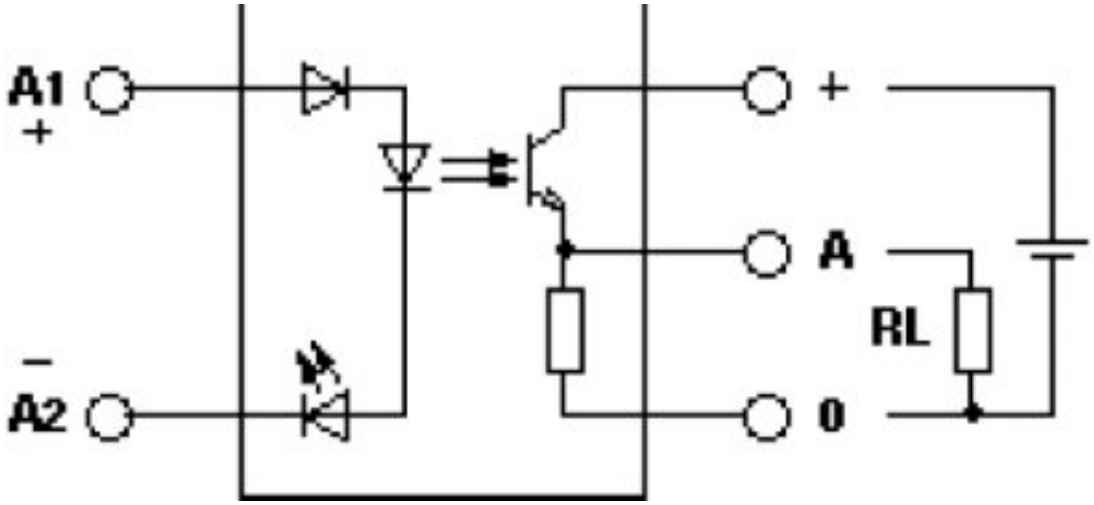

Phoenix Contact 2014 © - all rights reserved
http://www.phoenixcontact.com