Data interface - EM-CAN-GATEWAY-IFS - 2901504

Please be informed that the data shown in this PDF Document is generated from our Online Catalog. Please find the complete data in the user's documentation. Our General Terms of Use for Downloads are valid (http://phoenixcontact.com/download)



Gateway for the connection of up to 32 INTERFACE system devices to a higher-level controller via CANopen®. The INTERFACE system devices are connected to the Gateway via DIN rail connectors, the DIN rail connectors are provided.

Key Commercial Data

Packing unit	1 pc
Weight per Piece (excluding packing)	200.0 g
Custom tariff number	85389091
Country of origin	Germany

Technical data

Note

Utilization restriction	EMC: class A product, see manufacturer's declaration in the download area

Device supply

Rated control circuit supply voltage U_S	24 V DC -20 % ... +25 %
Rated control supply current I_S	85 mA (plus load current of the outputs)
Protective circuit	Reverse polarity protection
	Surge protection

Digital inputs

Number	8
Rated actuating voltage U_C	24 V DC ±20 %
Rated actuating current I_C	3 mA
Protective circuit	Reverse polarity protection

Digital outputs

Designation	Switching outputs
Number	4

Data interface - EM-CAN-GATEWAY-IFS - 2901504

Technical data

Digital outputs

Note on protection circuit	Fusing with max. 8 A F-fuse
Residual voltage	1 V
Maximum switching voltage	23 V DC (U_B - $U_{resid.}$ of the output)
Max. switching current	500 mA
Protective circuit	Parallel protection against polarity reversal, pay attention to the fuse

Connection data supply

Connection name	Supply
Connection method	Screw connection
Stripping length	8 mm
Screw thread	M3
Conductor cross section solid	0.2 mm² ... 2 mm²
Conductor cross section flexible	0.2 mm² ... 2.5 mm²
Conductor cross section AWG	12 ... 24

Connection data programming connection

Connection name	Programming connection
Connection method	S-PORT (socket)
Number of connections	1
Number of positions	12

Connection data INTERFACE system

Connection name	INTERFACE system
Connection method	DIN rail bus connectors
Number of connections	1
Number of positions	5

Connection data BUS connection

Connection name	CANopen®
Connection method	Screw connection
Number of connections	1
Number of positions	4

General

Operating mode	100% operating factor
Degree of protection	IP20
Standards/regulations	EN 50178
Degree of pollution	2
Overvoltage category	III
Mounting position	any

Data interface - EM-CAN-GATEWAY-IFS - 2901504

Technical data

General

Assembly instructions	In rows with zero spacing
Mounting type	DIN rail mounting
Housing material	Polyamide PA non-reinforced
Color	green

Serial interface

Interface 1	IFS interface
Serial transmission speed	76.8 kbps
Connection method	DIN rail bus connectors
Interface 2	CANopen®
Serial transmission speed	10 kbps ... 1 Mbps
Connection method	MSTB plug entry

Ambient conditions

Ambient temperature (operation)	-25 °C ... 50 °C
Ambient temperature (storage/transport)	-35 °C ... 80 °C

Dimensions

Width	22.5 mm
Height	99 mm
Depth	114.5 mm

Standards and Regulations

Standards/regulations	EN 50178
Degree of pollution	2
Overvoltage category	III

Classifications

eCl@ss

eCl@ss 4.0	27371190
eCl@ss 4.1	27371190
eCl@ss 5.0	27371692
eCl@ss 5.1	27371692
eCl@ss 6.0	27371001
eCl@ss 7.0	27371001
eCl@ss 8.0	27242608

ETIM

ETIM 3.0	EC000066

Data interface - EM-CAN-GATEWAY-IFS - 2901504

Classifications

ETIM

ETIM 4.0	EC000066
ETIM 5.0	EC001604

UNSPSC

UNSPSC 6.01	30211915
UNSPSC 7.0901	39121514
UNSPSC 11	39121514
UNSPSC 12.01	39121514
UNSPSC 13.2	39121514

Approvals

Approvals

Approvals

UL Listed / cUL Listed / cULus Listed

Ex Approvals

Approvals submitted

Approval details

UL Listed

cUL Listed

cULus Listed

Drawings

Data interface - EM-CAN-GATEWAY-IFS - 2901504

Schematic diagram

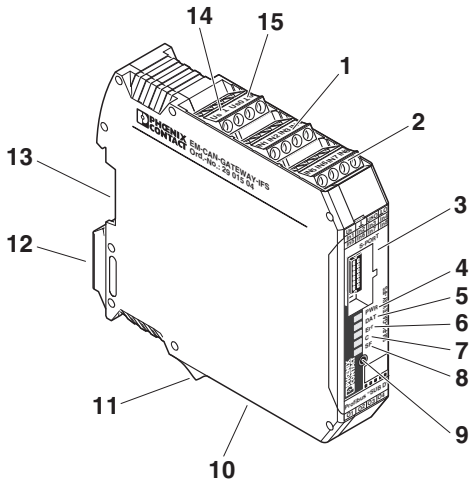

Block diagram

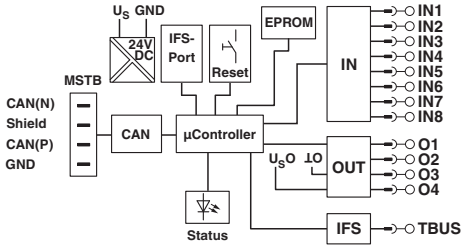

Phoenix Contact 2016 © - all rights reserved
http://www.phoenixcontact.com