Hybrid motor starter - ELR H3-IES-SC- 24DC/500AC-0,6 - 2900566

Please be informed that the data shown in this PDF Document is generated from our Online Catalog. Please find the complete data in the user's documentation. Our General Terms of Use for Downloads are valid (http://phoenixcontact.com/download)



Hybrid motor starter for starting 3~ AC motors up to 500 V AC and 0.6 A output current, with 24 V DC control voltage, adjustable overload shutdown and emergency stop function to SIL3 /PL e, and screw connection.

Product Features

- 22.5 mm wide
- Safety level according to IEC 61508-1: SIL 3, ISO 13849: PL e
- Reduction in wiring
- Long service life
- Space saving
- 3-phase loop bridges



Key Commercial Data

Packing unit	1 pc
Weight per Piece (excluding packing)	260.0 g
Custom tariff number	85371099
Country of origin	Germany

Technical data

Dimensions

Width	22.5 mm
Height	99 mm
Depth	114.5 mm

Ambient conditions

Ambient temperature (operation)	-25 °C ... 70 °C (observe derating)
Ambient temperature (storage/transport)	-40 °C ... 80 °C
Degree of protection	IP20

Hybrid motor starter - ELR H3-IES-SC- 24DC/500AC-0,6 - 2900566

Technical data

Device supply

Rated control circuit supply voltage U_S	24 V DC
Control supply voltage range	19.2 V DC ... 30 V DC
Rated control supply current I_S	40 mA
Protective circuit	Reverse polarity protection Parallel polarity protection diode
	Surge protection

Input data

Input name	Control input right/left
Rated actuating voltage U_C	24 V DC
Voltage range	19.2 V DC ... 30 V DC
Rated actuating current I_C	5 mA
Switching threshold	9.6 V (“0” signal)
	19.2 V (“1” signal)
Switching level	< 5 V DC (For EMERGENCY STOP)
Protective circuit	Reverse polarity protection
Typical turn-off time	< 30 ms

Output data load output

Output name	AC output
Rated operating voltage U_e	500 V AC
Operating voltage range	42 V AC ... 550 V AC
Mains frequency	50 Hz
	60 Hz
Load current range	75 mA ... 600 mA (see to derating)
Trigger characteristic in acc. with IEC 60947	Class 10A
Cooling time	20 min. (for auto reset)
Rated operating current at AC-51	0.6 A
Rated operating current at AC-53a	0.6 A
Leakage current	0 mA
Protective circuit	Surge protection Varistor

Output data reply output

Output name	Acknowledge output
Note	Confirmation: floating change-over contact, signal contact
Contact type	1 PDT
Switching capacity according to IEC 60947-5-1	3 A (230 V, AC15)
	2 A (24 V, DC13)

General

Hybrid motor starter - ELR H3-IES-SC- 24DC/500AC-0,6 - 2900566

Technical data

General

Switching frequency	≤ 2 Hz (Load-dependent)
Mounting position	vertical (horizontal DIN rail, motor output below)
Assembly instructions	alignable, for spacing see derating
Operating mode	100% operating factor
Maximum power dissipation	2.5 W
Minimum power dissipation	0.88 W
Operating voltage display	Green LED
Status display	Yellow LED
Indication	Red LED

Connection data, input side

Connection name	Control circuits
Connection method	Screw connection
Stripping length	8 mm
Screw thread	M3
Conductor cross section solid	0.2 mm² ... 2.5 mm²
Conductor cross section flexible	0.2 mm² ... 2.5 mm²
Conductor cross section AWG	24 ... 14
Torque	0.5 Nm ... 0.6 Nm

Connection data, output side

Connection name	Load circuit
Connection method	Screw connection
Stripping length	8 mm
Screw thread	M3
Conductor cross section solid	0.2 mm² ... 2.5 mm²
Conductor cross section flexible	0.2 mm² ... 2.5 mm²
Conductor cross section AWG	24 ... 14
Torque	0.5 Nm ... 0.6 Nm

Standards/regulations

Designation	Standards/regulations
Standards/regulations	IEC 60947-1
	EN 60947-4-2
	IEC 61508
	ISO 13849

Insulation characteristics

Rated insulation voltage	500 V

Hybrid motor starter - ELR H3-IES-SC- 24DC/500AC-0,6 - 2900566

Technical data

Insulation characteristics

Rated surge voltage	6 kV
Overvoltage category	III
Degree of pollution	2
Designation	Insulation characteristics between the control input and control supply voltage, and auxiliary circuit to the main circuit
Insulation	Safe isolation (IEC 60947-1) at operating voltage ≤ 300 V AC (e.g., 230/400 V AC, 277/480 V AC)
	Safe isolation (EN 50178) at operating voltage ≤ 300 V A (e.g., 230/400 V AC, 277/480 V AC)
	Basic isolation (IEC 60947-1) at operating voltage 300 ... 500 V AC
	Safe isolation (EN 50178) at operating voltage 300 ... 500 V AC
Designation	Isolation characteristics between the control input and control supply voltage to auxiliary circuit
Insulation	Safe isolation (IEC 60947-1) in the auxiliary circuit ≤ 300 V AC
	Safe isolation (EN 50178) in the auxiliary circuit ≤ 300 V AC

Approvals/conformities

Safety Integrity Level according to IEC 61508	SIL 3 (safe shutdown)
	SIL 2 (motor protection)
Category acc. to EN ISO 13849	3 (Safe shutdown)
Performance level according to ISO 13849	e (Safe shutdown)
ATEX	# II (2) G [Ex e] [Ex d] [Ex px]
	# II (2) D [Ex t] [Ex p]
EU type-examination certificate	PTB 07 ATEX 3145

UL data

SCCR	100 kA (480 V AC (fuse: 30 A class CC/30 A class J (high fault)))
	5 kA (480 V AC (fuse: 20 A RK5 (standard fault)))
FLA	0.6 A (480 V AC)
Group installation	20 A (class RK5, SCCR 5kA, #24 - 14 AWG max. solid and stranded)
	30 A (class CC or J, SCCR 100kA, #24 - 14 AWG max, solid and stranded)
Category code	NLDX / NRNT

Standards and Regulations

Designation	Standards/regulations
Standards/regulations	IEC 60947-1
	EN 60947-4-2
	IEC 61508
	ISO 13849
ATEX	# II (2) G [Ex e] [Ex d] [Ex px]

Hybrid motor starter - ELR H3-IES-SC- 24DC/500AC-0,6 - 2900566

Technical data

Standards and Regulations

	# II (2) D [Ex t] [Ex p]

Classifications

eCl@ss

eCl@ss 4.0	27371102
eCl@ss 4.1	27371102
eCl@ss 5.0	27371601
eCl@ss 5.1	27371601
eCl@ss 6.0	27371601
eCl@ss 7.0	27371601
eCl@ss 8.0	27370905
eCl@ss 9.0	27370905

ETIM

ETIM 2.0	EC000066
ETIM 3.0	EC000066
ETIM 4.0	EC000066
ETIM 5.0	EC002055

UNSPSC

UNSPSC 6.01	30211915
UNSPSC 7.0901	39121514
UNSPSC 11	39121514
UNSPSC 12.01	39121514
UNSPSC 13.2	39121514

Approvals

Approvals

Approvals

UL Listed / cUL Listed / IECEE CB Scheme / GL / GL-SW / UL Listed / cUL Listed / EAC / cULus Listed / GL

Ex Approvals

ATEX

Hybrid motor starter - ELR H3-IES-SC- 24DC/500AC-0,6 - 2900566

Approvals

Approvals submitted

Approval details

UL Listed

cUL Listed

IECEE CB Scheme

GL

GL-SW

UL Listed

cUL Listed

EAC

cULus Listed

GL

Drawings

Hybrid motor starter - ELR H3-IES-SC- 24DC/500AC-0,6 - 2900566

Diagram

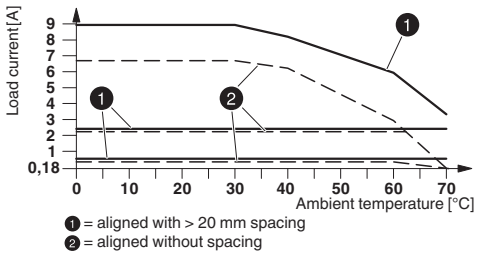

Block diagram

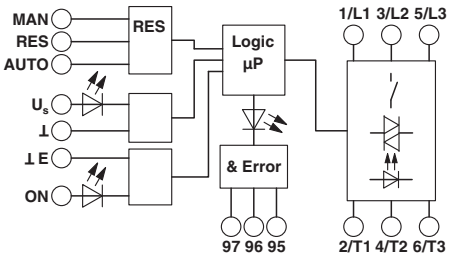

Derating diagram

Circuit diagram

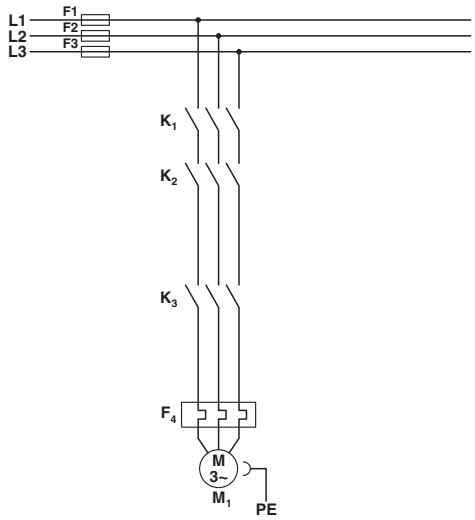

Conventional structure
Main current path for contactor according to category 3

K1 + K2 = Emergency stop contactor
K3 = Right contactor
F4 = Motor protection relay

Circuit diagram

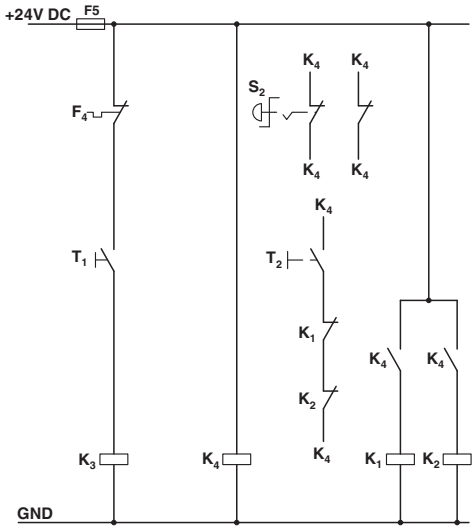

Conventional structure
Control current path for contactor according to category 3

K1 + K2 = Emergency stop contactor
K3 = Right contactor
K4 = PSR SCP-24DC.../safety relay
T1 = Right, T3 = Reset
S2 = Emergency stop
F4 = Motor protection relay

Hybrid motor starter - ELR H3-IES-SC- 24DC/500AC-0,6 - 2900566

Circuit diagram

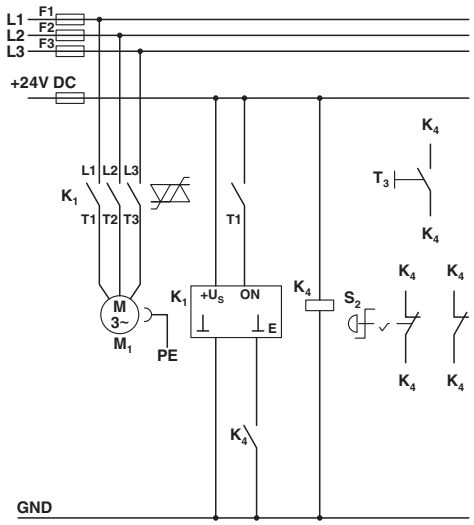

Structure with CONTACTRON

Main and control current path for '3 in 1' hybrid motor starter according to category 3

K1 = '3 in 1' hybrid motor starter
K4 = PSR SCP-24DC.../safety relay
T1 = Right, T3 = Reset
S2 = Emergency stop

Phoenix Contact 2016 © - all rights reserved
http://www.phoenixcontact.com