Extract from the online catalog

ELR H3-ES-SC- 24DC/500AC-0,6

Order No.: 2900550

The figure shows the 9 A version



http://eshop.phoenixcontact.de/phoenix/treeViewClick.do?UID=2900550

"2 in 1" hybrid motor starter for starting 3~ AC motors up to 550 V AC, with 24 V DC input, 0.6 A output current, and emergency stop function.



Product notes

WEEE/RoHS-compliant since: 02/09/2010

http://www.download.phoenixcontact.com
Please note that the data given here has been taken from the online catalog. For comprehensive information and data, please refer to the user documentation. The General Terms and Conditions of Use apply to Internet downloads.

Commercial data	
GTIN (EAN)	4 046356 527729
Note	Made-to-order
sales group	G410
Pack	1 pcs.
Customs tariff	85364900

Technical data

Input data

Rated control supply voltage U_S	24 V DC
Rated control supply voltage range with reference to U_S	0.8 ... 1.25
Rated control supply current I_S	35 mA

Rated actuating voltage U_C	24 V DC
Rated actuating voltage range with reference to U_C	0.8 ... 1.25
Rated actuating current I_C	3 mA
Switching threshold "0" signal, voltage	9.6 V
Switching threshold "1" signal voltage	19.2 V
Protective circuit	Protection against polarity reversal Parallel polarity protection diode
	Surge protection
Typical response time	< 35 ms
Typical turn-off time	< 40 ms
Operating voltage display	Green LED
Status display	Yellow LED
Indication	Red LED

Output data, load relay

Output name	AC output
Nominal output voltage	500 V AC
Nominal output voltage range	48 V AC ... 550 V AC
Load current	max. 600 mA (see derating curve)
Leakage current	0 mA
Residual voltage	< 0.3 V
Surge current	100 A (t = 10 ms)
Type of protection	Surge protection
Output name	Acknowledge output
Note	Confirmation 01: Floating PDT contact
Nominal output voltage	max. 253 V AC 0% ... 100% (300 V DC)
Continuous load current	2 A

Output data, signaling contact

Measuring via	Current transformer for line current on L1 and L3

Connection data

Connection method	Screw connection
Conductor cross section solid min.	0.14 mm²
Conductor cross section solid max.	2.5 mm²
Conductor cross section stranded min.	0.14 mm²
Conductor cross section stranded max.	2.5 mm²

Conductor cross section AWG/kcmil min.	26
Conductor cross section AWG/kcmil max	12

General data

Width	22.5 mm
Height	99 mm
Depth	114.5 mm
Test voltage input/output	4 kV_{rms}
Ambient temperature (operation)	-25 °C ... 70 °C
Ambient temperature (storage/transport)	-25 °C ... 70 °C
Mounting position	Vertical (horizontal DIN rail)
Assembly instructions	Can be aligned with spacing = 20 mm
Operating mode	100% operating factor
Degree of protection	IP20
Name	Standards/regulations
Standards/regulations	DIN EN 50178
	EN 60947
Name	Power station requirements
Standards/regulations	DWR 1300 / ZXX01/DD/7080.8d
Name	Air and creepage distances between the power circuits
Standards/regulations	DIN EN 50178
Rated surge voltage / insulation	6 kV/safe isolation
Rated insulation voltage	500 V
Pollution degree	2
Surge voltage category	III
Safety integrity level according to IEC 61508-1	SIL 3 (safe shutdown)
Category as per ISO 13849-1	3
Performance Level as per ISO 13849-1	e
Category in acc. with EN 954-1	3

Certificates / Approvals

Certification	CB, CUL Listed, UL Listed

Certification Ex: PTB

Diagrams/Drawings

Block diagram

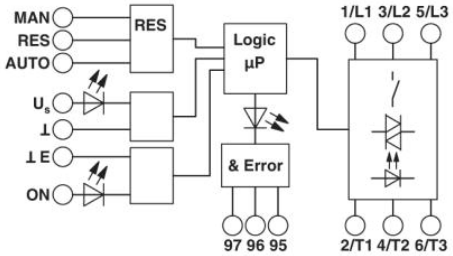

Circuit diagram

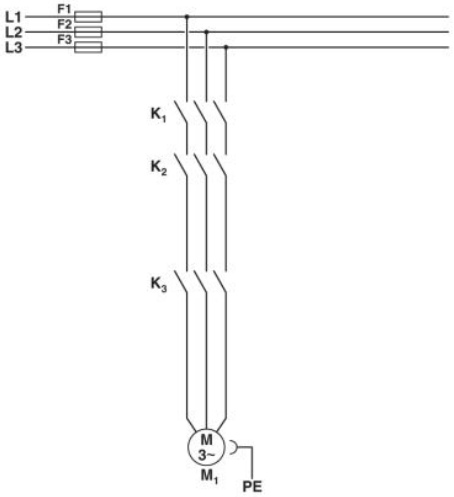

Conventional structure
Main current path for contactor according to category 3
K1 + K2 = Emergency stop contactor
K3 = Right contactor

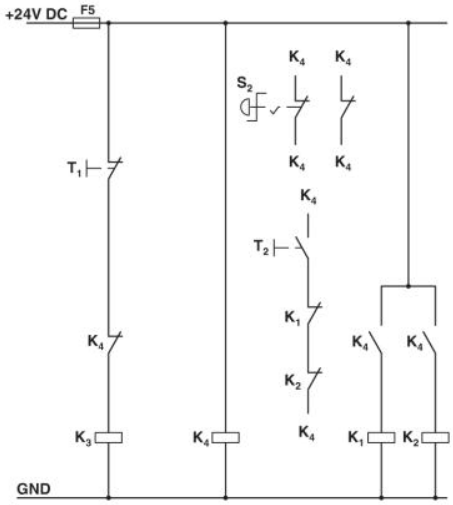

Conventional structure
Control current path for contactor according to category 3
K1 + K2 = Emergency stop contactor
K3 = Right contactor
K4 = PSR SCP-24DC.../safety relay
T1 = Right, T3 = Reset
S2 = Emergency stop

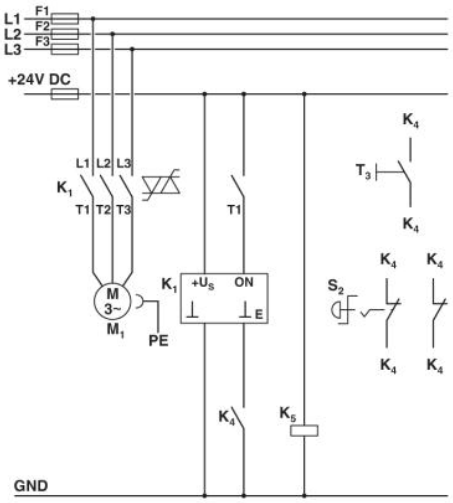

Structure with CONTACTRON
Main and control current path for "2 in 1" hybrid motor starter according to category 3
K1 = "2 in 1" hybrid motor starter
K4 = PSR SCP-24DC.../safety relay
T1 = Right, T3 = Reset
S2 = Emergency stop

Address

PHOENIX CONTACT Inc., USA
586 Fulling Mill Road
Middletown, PA 17057,USA
Phone (800) 888-7388
Fax (717) 944-1625
http://www.phoenixcon.com



© 2011 Phoenix Contact
Technical modifications reserved;