Solenoid driver - MACX MCR-EX-SL-SD-21-40-LP - 2865764

Please be informed that the data shown in this PDF Document is generated from our Online Catalog. Please find the complete data in the user's documentation. Our General Terms of Use for Downloads are valid (http://phoenixcontact.com/download)



Ex i solenoid driver. For the intrinsically safe control of Ex i solenoid valves, alarm modules or LEDs installed in the Ex area. Current limitation at 40 mA. For gases up to Group IIC, loop-powered, electrical isolation, SIL 3. Screw connection.

Your advantages

- Mechanically compatible with the DIN rail connector
- Various output characteristic curves compatible with standard solenoid valves
- Loop-powered: the required power is supplied via the control signal on the input side.
- Up to SIL 3 according to IEC 61508
- Installation in zone 2, protection type "n" (EN 60079-15) permitted
- Output [Ex ia] IIC/[Ex ia] IIB
- 2-way electrical isolation
- Input 19.2 ... 30 V DC

Key Commercial Data

Packing unit	1 pc
GTIN	4 046356 325233
GTIN	4046356325233

Technical data

Note

Utilization restriction	EMC: class A product, see manufacturer's declaration in the download area

Dimensions

Width	12.5 mm
Height	99 mm
Depth	114.5 mm

Ambient conditions

Solenoid driver - MACX MCR-EX-SL-SD-21-40-LP - 2865764

Technical data

Ambient conditions

Ambient temperature (operation)	-40 °C ... 60 °C (any mounting position, pay attention to the derating curve in the data sheet)
Ambient temperature (storage/transport)	-40 °C ... 80 °C
Maximum altitude	≤ 2000 m
Permissible humidity (operation)	10 % ... 95 % (non-condensing)
Degree of protection	IP20
Noise immunity	EN 61000-6-2

Output data

Output characteristic curve: Output resistor	287 Ω (Internal resistance R_i)
Response time	20 ms

Compatible valves

Note	This is an extract of possible combinations of valves and solenoid drivers.
Compatible valve	ASCO Coil 195
	Bürkert Coil AC 10 standard
	Bürkert Coil AC 10 high resistance
	Bürkert Coil AC 21 standard 700 mW / 65°C
	Bürkert Coil AC 21 high resistance 700 mW / 65°C
	Bürkert Coil AC 21 standard 900 mW / 45°C
	Bürkert Coil AC 21 high resistance 900 mW / 45°C
	Bürkert Coil AC 21 standard 900 mW / 60°C
	Bürkert Coil AC 21 high resistance 900 mW / 60°C
	Bürkert Coil G1 642735 standard 600 mW / 50°C
	Bürkert Coil G1 642735 high resistance 600 mW / 50°C
	Bürkert Coil G1 642735 standard 800 mW / 40°C
	Bürkert Coil G1 642735 high resistance 800 mW / 40°C
	Bürkert Coil G1 642735 standard 1000 mW / 40°C
	Bürkert Coil G1 642735 high resistance 1000 mW / 40°C
	Norgren Herion Coil 2050
	Norgren Herion Coil 2051
	Norgren Herion Coil 2052
	Norgren Herion Coil 2080 / 2082
	Norgren Herion Coil 2081 / 2083
	Norgren Herion Coil 2084
	Hörbiger Piezo P8 38x RF-Nx-SPN65 30 V type
	Hörbiger Piezo P20 381RF-NG-CPN61 30 V type
	Parker Coil VZ07 488650.01
	Parker Coil VZ33 494035.10
	Parker Coil VZ08 488660.01
	Parker Coil VZ09 488670.01

Solenoid driver - MACX MCR-EX-SL-SD-21-40-LP - 2865764

Technical data

Compatible valves

	Parker Coil VZ95 482160.01 EEx ia IIB T6
	Parker Coil VZ23 482870.01
	Samson Coil 3701-12 (12 V)
	Samson Coil 3701-13 (24 V)
	Samson Coil 3963-12 (12 V)
	Samson Coil 3963-13 (24 V)
	Samson Coil 3964-12 (12 V)
	Samson Coil 3964-13 (24 V)
	Seitz Pilot valve PV 12F73 Ci oH
	Seitz Pilot valve PV 12F73 Xi oH
	Seitz Pilot valve PV 12F73 Xi oH-2

Power supply

Power dissipation	< 1.055 W

Connection data

Connection method	Screw connection
Stripping length	7 mm
Screw thread	M3
Conductor cross section solid	0.2 mm² ... 2.5 mm²
Conductor cross section flexible	0.2 mm² ... 2.5 mm²
Conductor cross section AWG	24 ... 14
Torque	0.5 Nm ... 0.6 Nm

General

No. of channels	1
Maximum temperature coefficient	0.01 %/K
Status display	Yellow LED (switching state / status, lights up when output circuit is active)
Degree of pollution	2
Overvoltage category	II
Electromagnetic compatibility	Conformance with EMC directive
Interference emission	EN 61000-6-4
Housing material	PA 6.6-FR
Color	gray
Designation	Output/input
Electrical isolation	375 V (Peak value in accordance with EN 60079-11)
	300 V_{rms} (Rated insulation voltage (overvoltage category II; degree of pollution 2, safe isolation as per EN 61010-1))
	2.5 kV (50 Hz, 1 min., test voltage)
Conformance	CE-compliant, additionally EN 61326
ATEX	# II (1) G [Ex ia Ga] IIC/IIB/IIA
	# II (1) D [Ex ia Da] IIIC

Solenoid driver - MACX MCR-EX-SL-SD-21-40-LP - 2865764

Technical data

General

	# II 3 (1)G Ex nA [ia IIC Ga] IIC T4 Gc X
IECEx	[Ex ia Ga] IIC/IIB/IIA
	[Ex ia Da] IIIC
	Ex nA [ia IIC Ga] IIC T4 Gc
UL, USA/Canada	Class I Div 2; IS for Class I, II, III Div 1
SIL	3

Safety characteristic data

Integrity requirement	IEC 61508 - Low demand
Equipment type	Type A
Safety Integrity Level (SIL)	3
Safe Failure Fraction (SFF)	100 %
λ_{SU}	2.84 x 10^{-7} (284 FIT)
λ_{SD}	0
λ_{DU}	0
λ_{DD}	0
Probability of a hazardous failure on demand (PFD_{AVG})	0 (1 year)
	0 (5 years)
	0 (10 years)
Diagnostic coverage (DC)	DC_S=0 %, DC_D=0 %

Safety data

Input power P_i	negligible
Max. internal inductance L_i	negligible
Max. internal capacitance C_i	negligible
Max. output voltage U_o	25.1 V
Max. output current I_o	87 mA
Max. output power P_o	550 mW
Group	IIC
Max. external inductivity L_o	5 mH
Max. external capacity C_o	0.108 µF
Group	IIB
Max. external inductivity L_o	20 mH
Max. external capacity C_o	0.083 µF
Group	IIA
Max. external inductivity L_o	45 mH
Max. external capacity C_o	2.93 µF
Safety-related maximum voltage U_m	253 V AC (125 V DC)

Standards and Regulations

Electromagnetic compatibility	Conformance with EMC directive

Solenoid driver - MACX MCR-EX-SL-SD-21-40-LP - 2865764

Technical data

Standards and Regulations

Noise emission	EN 61000-6-4
Conformance	CE-compliant, additionally EN 61326
ATEX	# II (1) G [Ex ia Ga] IIC/IIB/IIA
	# II (1) D [Ex ia Da] IIIC
	# II 3 (1)G Ex nA [ia IIC Ga] IIC T4 Gc X
IECEx	[Ex ia Ga] IIC/IIB/IIA
	[Ex ia Da] IIIC
	Ex nA [ia IIC Ga] IIC T4 Gc
UL, USA/Canada	Class I Div 2; IS for Class I, II, III Div 1
DNV GL-Temperature	B
DNV GL-Humidity	B
DNV GL-Vibration	A
DNV GL-EMC	A
DNV GL-Enclosure	Required protection according to the Rules shall be provided upon installation on board
Group	IIC
	IIB
	IIA

Environmental Product Compliance

REACh SVHC	Lead 7439-92-1
China RoHS	Environmentally Friendly Use Period = 50
	For details about hazardous substances go to tab “Downloads”, Category “Manufacturer's declaration”

Drawings

Solenoid driver - MACX MCR-EX-SL-SD-21-40-LP - 2865764

Block diagram

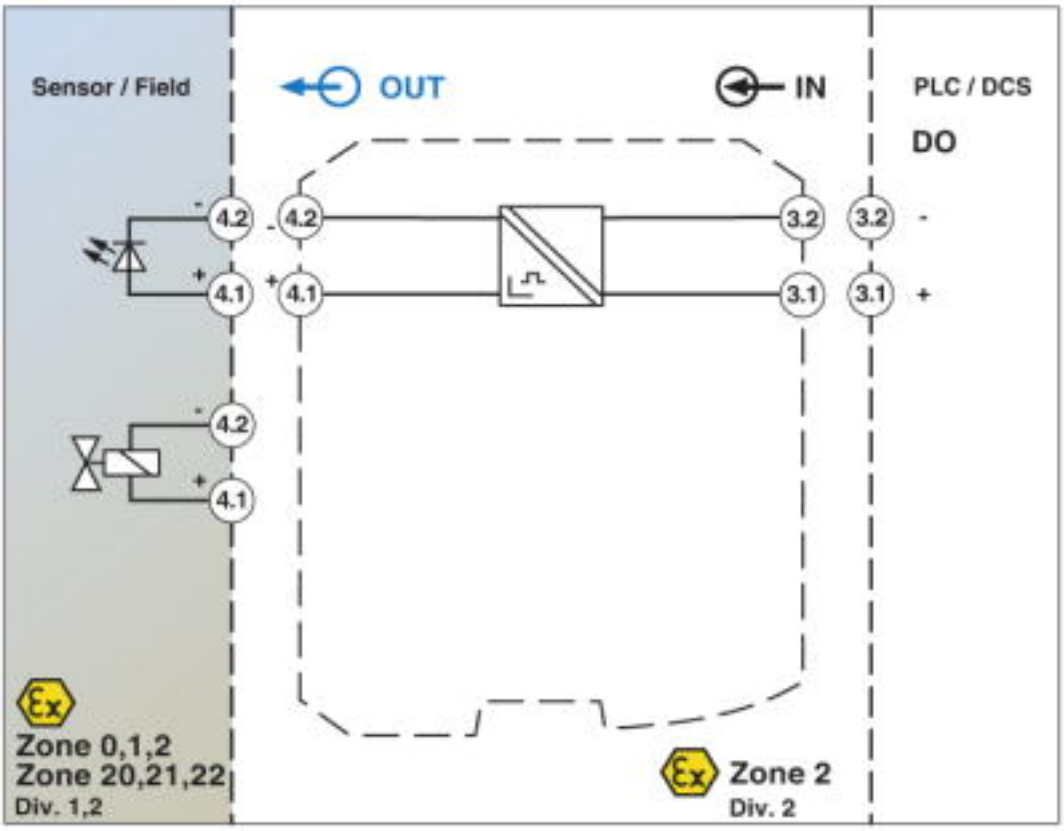

Diagram

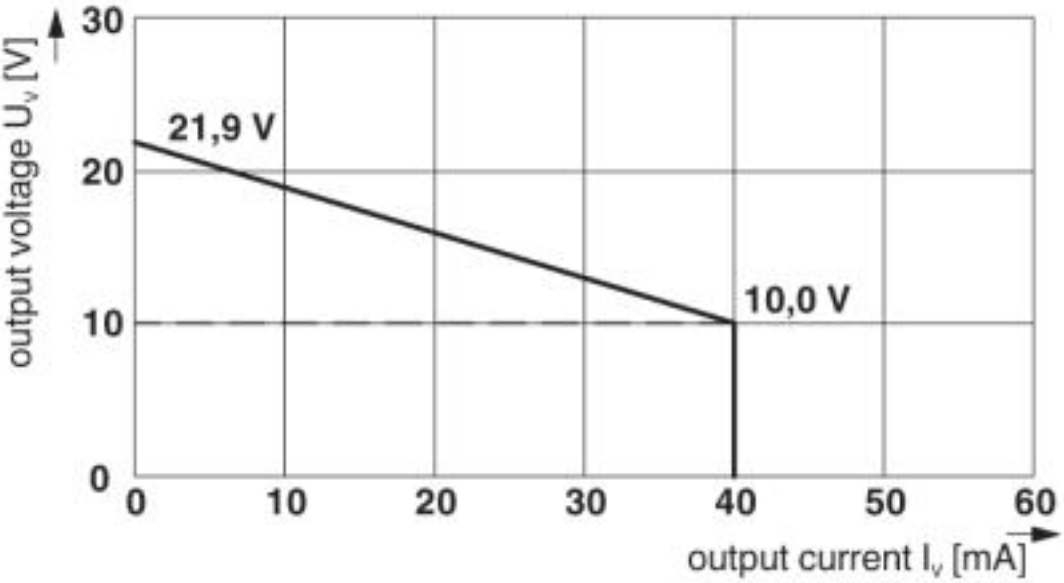

Solenoid driver - MACX MCR-EX-SL-SD-21-40-LP - 2865764

Dimensional drawing

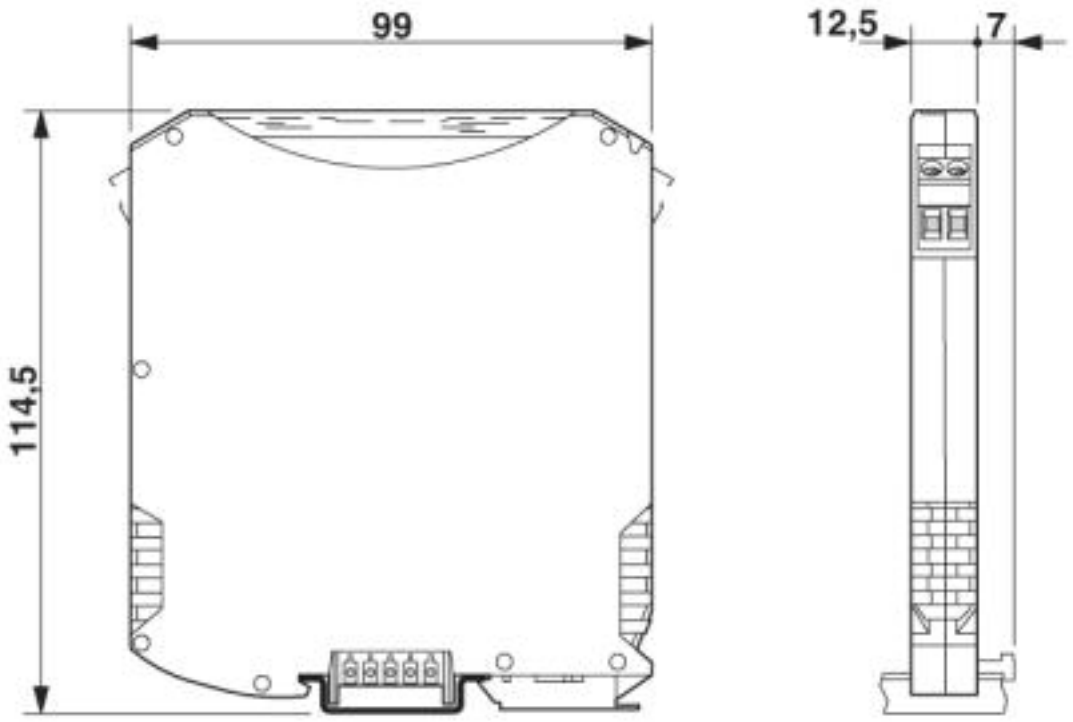

Approvals

Approvals

Approvals

UL Listed / cUL Listed / Functional Safety / DNV GL / cULus Listed

Ex Approvals

IECEx / ATEX / UL Listed / cUL Listed / EAC Ex / cULus Listed

Approval details

UL Listed		http://database.ul.com/cgi-bin/XYV/template/LISEXT/1FRAME/index.htm	FILE E 330267

cUL Listed		http://database.ul.com/cgi-bin/XYV/template/LISEXT/1FRAME/index.htm	FILE E 330267

Functional Safety	16/04-017 R025 V1R1

Solenoid driver - MACX MCR-EX-SL-SD-21-40-LP - 2865764

Approvals

DNV GL		https://approvalfinder.dnvgl.com/	TAA000020C

cULus Listed	

Phoenix Contact 2019 © - all rights reserved
http://www.phoenixcontact.com

PHOENIX CONTACT GmbH & Co. KG
Flachsmarktstr. 8
32825 Blomberg
Germany
Tel. +49 5235 300
Fax +49 5235 3 41200
http://www.phoenixcontact.com