Isolation amplifier - MACX MCR-EX-SL-NAM-2T - 2865463

Please be informed that the data shown in this PDF Document is generated from our Online Catalog. Please find the complete data in the user's documentation. Our General Terms of Use for Downloads are valid (http://phoenixcontact.com/download)



Ex i NAMUR isolating amplifier For operating proximity sensors and switches in Ex areas. The signals are transmitted via 2 transistor outputs (passive) to the safe area. Line fault detection (LFD), 3-way isolation, SIL 2.

Your advantages

- Power supply and error indication possible via DIN rail connector
- Up to SIL 2 according to EN 61508
- Installation in zone 2, protection type "n" (EN 60079-15) permitted
- Signal output 2 can also be used as an error signaling output
- Line fault detection (LFD), can be activated/deactivated, error indicated by red flashing LED with disabling of transistor output
- LED indicators for supply voltage, switching state, and malfunction according to NAMUR NE 44
- 4-way electrical isolation
- Direction of operation can be selected (operating or closed circuit current behavior)
- 2 transistor signal outputs (passive); up to 5 kHz
- Input for NAMUR proximity sensors (EN 60947-5-6), floating contacts or contacts with resistance circuit, [Ex ia] IIC

Key Commercial Data

Packing unit	1 pc
GTIN	4 046356 160483
GTIN	4046356160483

Technical data

Note

Utilization restriction	EMC: class A product, see manufacturer's declaration in the download area

Dimensions

Width	12.5 mm
Height	112.5 mm
Depth	113.7 mm

Isolation amplifier - MACX MCR-EX-SL-NAM-2T - 2865463

Technical data

Ambient conditions

Ambient temperature (operation)	-20 °C ... 60 °C (Any mounting position)
Ambient temperature (storage/transport)	-40 °C ... 80 °C
Maximum altitude	≤ 2000 m
Permissible humidity (operation)	10 % ... 95 % (non-condensing)
Degree of protection	IP20 (not assessed by UL)
Noise immunity	EN 61000-6-2

Input data

Non-load voltage	~ 8 V DC
Switching points (attenuated)	< 1.2 mA (blocking)
Switching points (unattenuated)	> 2.1 mA (conductive)
Signal input	Intrinsically safe
Available input sources	NAMUR proximity sensors (EN 60947-5-6)
Short-circuit current	~ 8 mA
Switching hysteresis	< 0.2 mA
Line fault detection	Break 0.05 mA < IIN < 0.35 mA
	Short circuit 100 Ω < RSensor < 360 Ω

Output data

Switching output	2 transistor outputs, passive
Minimum switching voltage	3 V DC
Maximum switching voltage	30 V DC
Min. contact current	5 mA (short-circuit-proof)
Max. switching current	50 mA (short-circuit-proof)
Switching frequency	≤ 5 kHz

Power supply

Nominal supply voltage	24 V DC
Supply voltage range	19.2 V DC ... 30 V DC (24 V DC -20%...+25%)
Max. current consumption	< 28 mA (24 V DC)
Power dissipation	≤ 800 mW
Power consumption	≤ 800 mW

Connection data

Connection method	Screw connection
Stripping length	7 mm
Screw thread	M3
Conductor cross section solid	0.2 mm² ... 2.5 mm²
Conductor cross section flexible	0.2 mm² ... 2.5 mm²
Conductor cross section AWG	24 ... 14
Torque	0.5 Nm ... 0.6 Nm

General

Isolation amplifier - MACX MCR-EX-SL-NAM-2T - 2865463

Technical data

General

No. of channels	1
Status display	Green LED (supply voltage)
	LED yellow (switching state)
	Red LED (line errors)
Degree of pollution	2
Overvoltage category	II
Electromagnetic compatibility	Conformance with EMC directive
Interference emission	EN 61000-6-4
Housing material	PA 6.6-FR
Color	gray
Designation	Input/output
Electrical isolation	375 V (Peak value in accordance with IEC/EN 60079-11)
Designation	Input/output/supply, DIN rail connector
	Input/supply, DIN rail connector
Electrical isolation	375 V (Peak value in accordance with IEC/EN 60079-11)
Designation	Output 1/output 2

Safety characteristic data

Safety Integrity Level (SIL)	1
	1

Safety data

Max. internal inductance L_i	negligible
Max. internal capacitance C_i	1.1 nF
Max. output voltage U_o	9.6 V
Max. output current I_o	10 mA
Max. output power P_o	25 mW
Group	IIC
Max. external inductivity L_o	300 mH
Max. external capacitance C_o	3.6 µF
Additional text	simple circuit
Group	IIC
Max. external inductivity L_o	100 mH
Max. external capacitance C_o	510 nF
Additional text	mixed circuit
Group	IIC
Max. external inductivity L_o	50 mH
Max. external capacitance C_o	580 nF
Additional text	mixed circuit
Group	IIC
Max. external inductivity L_o	5 mH

Isolation amplifier - MACX MCR-EX-SL-NAM-2T - 2865463

Technical data

Safety data

Max. external capacitance C_o	600 nF
Additional text	mixed circuit
Group	IIC
Max. external inductivity L_o	1 mH
Max. external capacitance C_o	600 nF
Additional text	mixed circuit
Group	IIC
Max. external inductivity L_o	10 µH
Max. external capacitance C_o	600 nF
Additional text	mixed circuit
Group	IIB/IIIC
Max. external inductivity L_o	1000 mH
Max. external capacitance C_o	26 µF
Additional text	simple circuit
Group	IIB/IIA/IIIC
Max. external inductivity L_o	100 mH
Max. external capacitance C_o	1 µF
Additional text	mixed circuit
Group	IIB/IIA/IIIC
Max. external inductivity L_o	5 mH
Max. external capacitance C_o	1 µF
Additional text	mixed circuit
Group	IIB/IIA/IIIC
Max. external inductivity L_o	1 mH
Max. external capacitance C_o	1 µF
Additional text	mixed circuit
Group	IIB/IIA/IIIC
Max. external inductivity L_o	10 µH
Max. external capacitance C_o	1 µF
Additional text	mixed circuit
Safety-related maximum voltage U_m	253 V AC (125 V DC)

EMC data

Designation	Electromagnetic RF field
Standards/regulations	EN 61000-4-3
Evaluation criterion	A
Designation	Fast transients (burst)
Standards/regulations	EN 61000-4-4
Evaluation criterion	A
Designation	Conducted interferences

Isolation amplifier - MACX MCR-EX-SL-NAM-2T - 2865463

Technical data

EMC data

Standards/regulations	EN 61000-4-6
Evaluation criterion	A

Standards and Regulations

Electromagnetic compatibility	Conformance with EMC directive
Noise emission	EN 61000-6-4
Designation	Electromagnetic RF field
Standards/regulations	EN 61000-4-3
Evaluation criterion	A
Standards/regulations	EN 61000-4-4
Designation	Conducted interferences
Standards/regulations	EN 61000-4-6
Evaluation criterion	A
Conformance	CE-compliant, additionally EN 61326
ATEX	# II (1) G [Ex ia Ga] IIC
	# II (1) D [Ex ia Da] IIIC
	# II 3 (1) G Ex nA [ia Ga] IIC T4 Gc
IECEx	[Ex ia Ga] IIC
	[Ex ia Da] IIIC
	Ex nA [ia Ga] IIC T4 Gc
UL, USA/Canada	Class I Div 2; IS for Class I, II, III Div 1
DNV GL-Temperature	B
DNV GL-Humidity	B
DNV GL-Vibration	A
DNV GL-EMC	B
DNV GL-Enclosure	Required protection according to the Rules shall be provided upon installation on board
Group	IIC
	IIC
	IIC
	IIC
	IIC
	IIC

Conformance/approvals

Designation	CE
Identification	CE-compliant
Additional text	and EN 61326
Designation	ATEX
Identification	# II (1) G [Ex ia Ga] IIC
	# II (1) D [Ex ia Da] IIIC
	# II 3 (1) G Ex nA [ia Ga] IIC T4 Gc

Isolation amplifier - MACX MCR-EX-SL-NAM-2T - 2865463

Technical data

Conformance/approvals

Certificate	IBExU 08 ATEX 1100 X
Designation	IECEx
Identification	[Ex ia Ga] IIC
	[Ex ia Da] IIIC
	Ex nA [ia Ga] IIC T4 Gc
Certificate	IECEx IBE 08.0005X
Designation	UL, USA/Canada
Identification	Class I Div 2; IS for Class I, II, III Div 1
Certificate	#, C.D.-No 83104549
Designation	Shipbuilding approval
Certificate	DNV GL TAA00000AG
Designation	Safety Integrity Level (SIL, IEC 61508)
Identification	2
Designation	EAC Ex
Identification	# [Ex ia Ga] IIC
	# [Ex ia Da] IIIC
Certificate	RU C-DE.AB72.B.00093/19
Designation	INMETRO
Identification	[Ex ia Ga] IIC
	[Ex ia Da] IIIC
	Ex nA [ia Ga] IIC T4 Gc
Certificate	DNV 18.0141 X
Temperature	B
Humidity	B
Vibration	A
EMC	B
Enclosure	Required protection according to the Rules shall be provided upon installation on board

Environmental Product Compliance

REACh SVHC	Lead 7439-92-1
China RoHS	Environmentally Friendly Use Period = 50 years
	For details about hazardous substances go to tab “Downloads”, Category “Manufacturer's declaration”

Drawings

Isolation amplifier - MACX MCR-EX-SL-NAM-2T - 2865463

Block diagram

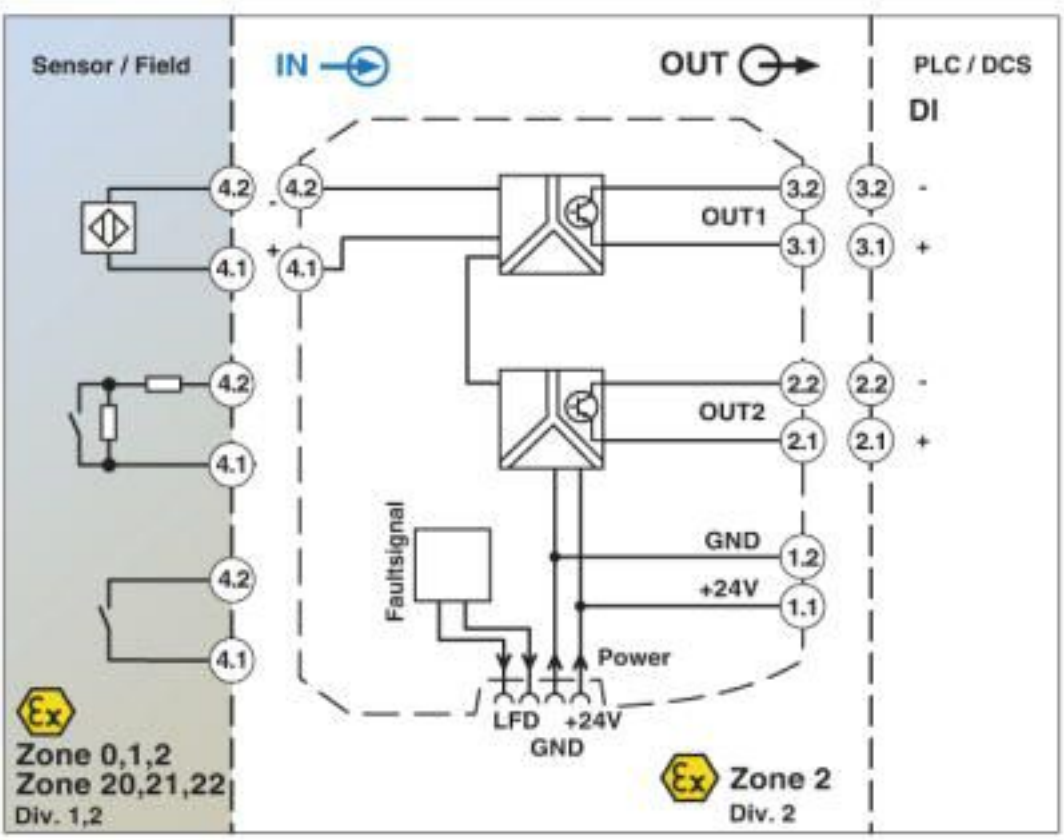

Isolation amplifier - MACX MCR-EX-SL-NAM-2T - 2865463

Dimensional drawing

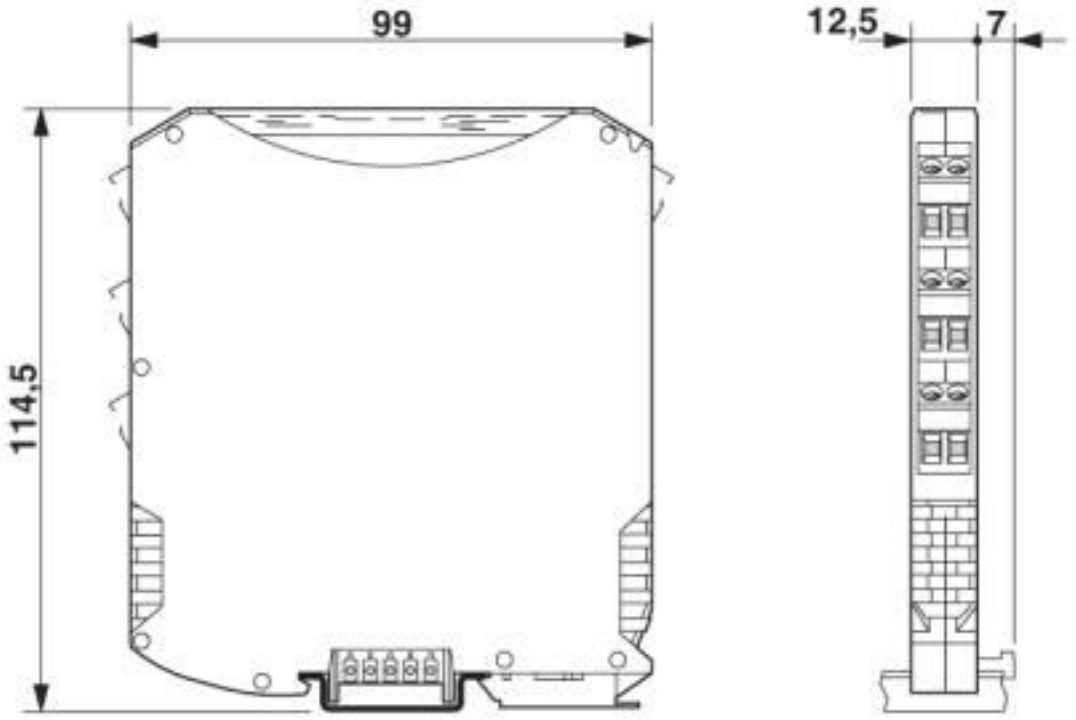

Pictogram

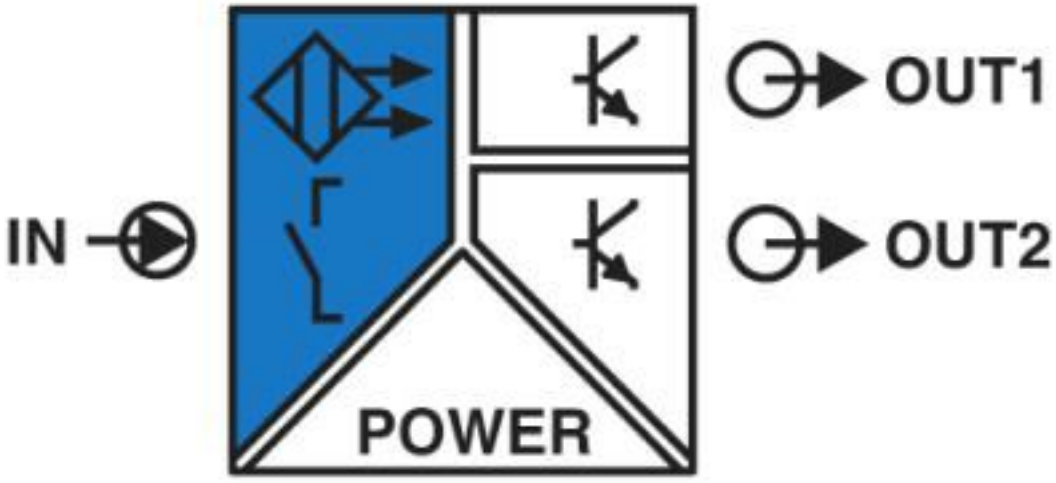

Classifications

eCl@ss

eCl@ss 10.0.1	27210121
eCl@ss 4.0	27210100
eCl@ss 4.1	27210100
eCl@ss 5.0	27210100

Isolation amplifier - MACX MCR-EX-SL-NAM-2T - 2865463

Classifications

eCl@ss

eCl@ss 5.1	27210100
eCl@ss 6.0	27210100
eCl@ss 7.0	27210121
eCl@ss 8.0	27210121
eCl@ss 9.0	27210121

ETIM

ETIM 2.0	EC001485
ETIM 3.0	EC001485
ETIM 4.0	EC001485
ETIM 5.0	EC001485
ETIM 6.0	EC001485
ETIM 7.0	EC001485

UNSPSC

UNSPSC 6.01	30211506
UNSPSC 7.0901	39121008
UNSPSC 11	39121008
UNSPSC 12.01	39121008
UNSPSC 13.2	39121008
UNSPSC 18.0	39121008
UNSPSC 19.0	39121008
UNSPSC 20.0	39121008
UNSPSC 21.0	39121008

Approvals

Approvals

Approvals

DNV GL / UL Listed / cUL Listed / Functional Safety / cULus Listed

Ex Approvals

IECEx / ATEX / UL Listed / cUL Listed / EAC Ex / cULus Listed

Approval details

DNV GL		https://approvalfinder.dnvgl.com/	TAA00000AG

Isolation amplifier - MACX MCR-EX-SL-NAM-2T - 2865463

Approvals

UL Listed		http://database.ul.com/cgi-bin/XYV/template/LISEXT/1FRAME/index.htm	FILE E 330267

cUL Listed		http://database.ul.com/cgi-bin/XYV/template/LISEXT/1FRAME/index.htm	FILE E 330267

Functional Safety	07-06-39 R006 V1R2

cULus Listed	

Accessories

Accessories

Component terminal block

Component terminal block - UKK 5-2R/NAMUR - 2941662



Double-level terminal block, with preassembled resistors

Device marking

Plastic label - UC-EMLP (11X9) - 0819291



Plastic label, Sheet, white, unlabeled, can be labeled with: BLUEMARK ID COLOR, BLUEMARK ID, BLUEMARK CLED, PLOTMARK, CMS-P1-PLOTTER, mounting type: adhesive, lettering field size: 11 x 9 mm, Number of individual labels: 10

Plastic label - UC-EMLP (11X9) YE - 0822602



Plastic label, Sheet, yellow, unlabeled, can be labeled with: BLUEMARK ID COLOR, BLUEMARK ID, BLUEMARK CLED, PLOTMARK, CMS-P1-PLOTTER, mounting type: adhesive, lettering field size: 11 x 9 mm, Number of individual labels: 10

Isolation amplifier - MACX MCR-EX-SL-NAM-2T - 2865463

Accessories

Plastic label - UC-EMLP (11X9) SR - 0828094



Plastic label, Sheet, silver, unlabeled, can be labeled with: BLUEMARK ID COLOR, BLUEMARK ID, BLUEMARK CLED, PLOTMARK, CMS-P1-PLOTTER, mounting type: adhesive, lettering field size: 11 x 9 mm, Number of individual labels: 10

Plastic label - US-EMLP (11X9) - 0828789



Plastic label, Card, white, unlabeled, can be labeled with: BLUEMARK ID COLOR, BLUEMARK ID, THERMOMARK PRIME, THERMOMARK CARD 2.0, THERMOMARK CARD, mounting type: adhesive, lettering field size: 11 x 9 mm, Number of individual labels: 135

Plastic label - US-EMLP (11X9) YE - 0828871



Plastic label, Card, yellow, unlabeled, can be labeled with: BLUEMARK ID COLOR, BLUEMARK ID, THERMOMARK PRIME, THERMOMARK CARD 2.0, THERMOMARK CARD, mounting type: adhesive, lettering field size: 11 x 9 mm, Number of individual labels: 135

Plastic label - US-EMLP (11X9) SR - 0828872



Plastic label, Card, silver, unlabeled, can be labeled with: BLUEMARK ID COLOR, BLUEMARK ID, THERMOMARK PRIME, THERMOMARK CARD 2.0, THERMOMARK CARD, mounting type: adhesive, lettering field size: 11 x 9 mm, Number of individual labels: 135

Device marker - LS-EMLP (11X9) WH - 0831678



Device marker, Sheet, white, unlabeled, can be labeled with: TOPMARK NEO, TOPMARK LASER, mounting type: adhesive, lettering field size: 11 x 9 mm, Number of individual labels: 255

Isolation amplifier - MACX MCR-EX-SL-NAM-2T - 2865463

Accessories

Device marker - LS-EMLP (11X9) YE - 0831732



Device marker, Sheet, yellow, unlabeled, can be labeled with: TOPMARK NEO, TOPMARK LASER, mounting type: adhesive, lettering field size: 11 x 9 mm, Number of individual labels: 255

Device marker - LS-EMLP (11X9) SR - 0831705



Device marker, Sheet, silver, unlabeled, can be labeled with: TOPMARK NEO, TOPMARK LASER, mounting type: adhesive, lettering field size: 11 x 9 mm, Number of individual labels: 255

DIN rail connector

DIN rail bus connectors - ME 6,2 TBUS-2 1,5/5-ST-3,81 GN - 2869728



DIN rail connector for DIN rail mounting. Universal for TBUS housing. Gold-plated contacts, 5-pos.

End cover

End cover - D-UKK 3/5 - 2770024



End cover, length: 56 mm, width: 2.5 mm, height: 52 mm, color: gray

End cover - D-UKK 3/5 BU - 2770105



End cover, length: 56 mm, width: 2.5 mm, height: 62 mm, color: blue

Insulating sleeve

Isolation amplifier - MACX MCR-EX-SL-NAM-2T - 2865463

Accessories

Insulating sleeve - MPS-IH BK - 0201731

Insulating sleeve, color: black



Insulating sleeve - MPS-IH GY - 0201728

Insulating sleeve, color: gray



Insulating sleeve - MPS-IH GN - 0201702

Insulating sleeve, color: green



Insulating sleeve - MPS-IH YE - 0201692

Insulating sleeve, color: yellow



Insulating sleeve - MPS-IH BU - 0201689

Insulating sleeve, color: blue



Isolation amplifier - MACX MCR-EX-SL-NAM-2T - 2865463

Accessories

Insulating sleeve - MPS-IH RD - 0201676



Insulating sleeve, color: red

Insulating sleeve - MPS-IH WH - 0201663



Insulating sleeve, color: white

Labeled device marker

Plastic label - UC-EMLP (11X9) CUS - 0824547



Plastic label, can be ordered: by sheet, white, labeled according to customer specifications, mounting type: adhesive, lettering field size: 11 x 9 mm

Plastic label - UC-EMLP (11X9) YE CUS - 0824548



Plastic label, can be ordered: by sheet, yellow, labeled according to customer specifications, mounting type: adhesive, lettering field size: 11 x 9 mm

Plastic label - UC-EMLP (11X9) SR CUS - 0828098



Plastic label, can be ordered: by sheet, silver, labeled according to customer specifications, mounting type: adhesive, lettering field size: 11 x 9 mm, Number of individual labels: 10

Module carrier

Isolation amplifier - MACX MCR-EX-SL-NAM-2T - 2865463

Accessories

Module carrier - TC-2D37SUB-ADIO32-2EX-P-UNI - 2904684



Universal Termination Carrier for connecting 16 two-channel MACX Analog Ex i signal conditioners to digital or analog I/O cards, via two D-SUB connectors, 37-pos. (1:1 connection)

Power module

Power and error message module - MACX MCR-PTB - 2865625



Power and fault signaling module with screw connection, including corresponding ME 17,5 TBUS 1,5/ 5-ST-3,81 GY DIN rail connector

Power and error message module - MACX MCR-PTB-SP - 2924184



Power and fault signaling module with Push-in connection, including corresponding ME 17,5 TBUS 1,5/ 5-ST-3,81 GY DIN rail connector

Test plug terminal block

Test plugs - MPS-MT - 0201744



Test plugs, with solder connection up to 1 mm² conductor cross section, color: gray

Phoenix Contact 2020 © - all rights reserved
http://www.phoenixcontact.com

PHOENIX CONTACT GmbH & Co. KG
Flachsmarktstr. 8
32825 Blomberg
Germany
Tel. +49 5235 300
Fax +49 5235 3 41200
http://www.phoenixcontact.com