Isolation amplifier - MACX MCR-EX-SL-NAM-2RO - 2865450

Please be informed that the data shown in this PDF Document is generated from our Online Catalog. Please find the complete data in the user's documentation. Our General Terms of Use for Downloads are valid (http://phoenixcontact.com/download)



Ex i NAMUR isolating amplifier For operating proximity sensors and switches in Ex areas. The signals are transmitted via 2 relay outputs (N/O contact) to the safe area. Line fault detection (LFD), 3-way isolation, SIL 2.

Your advantages

- Power supply and error indication possible via DIN rail connector
- Installation in zone 2, protection type "n" (EN 60079-15) permitted
- Up to SIL 2 according to EN 61508
- Line fault detection (LFD), can be activated/deactivated, error indicated by red flashing LED with de-excitation of output relay
- 4-way electrical isolation
- Direction of operation can be selected (operating or closed circuit current behavior)
- 2 relay signal outputs (N/O contact); output 2 can also be used as an error signaling output
- Input for NAMUR proximity sensors (EN 60947-5-6), floating contacts or contacts with resistance circuit, [Ex ia] IIC
- LED indicators for supply voltage, switching state, and malfunction according to NAMUR NE 44

Key Commercial Data

Packing unit	1 pc
GTIN	4 046356 160476
GTIN	4046356160476

Technical data

Note

Utilization restriction	EMC: class A product, see manufacturer's declaration in the download area

Dimensions

Width	12.5 mm
Height	112.5 mm
Depth	113.7 mm

Ambient conditions

Isolation amplifier - MACX MCR-EX-SL-NAM-2RO - 2865450

Technical data

Ambient conditions

Ambient temperature (operation)	-20 °C ... 60 °C (Any mounting position)
Ambient temperature (storage/transport)	-40 °C ... 85 °C
Maximum altitude	≤ 2000 m
Permissible humidity (operation)	10 % ... 95 % (non-condensing)
Permissible humidity (storage/transport)	5 % ... 95 % (non-condensing)
Degree of protection	IP20 (not assessed by UL)
Noise immunity	EN 61000-6-2 EN 61326

Input data

Non-load voltage	~ 8 V DC
Switching points (attenuated)	< 1.2 mA (blocking)
Switching points (unattenuated)	> 2.1 mA (conductive)
Signal input	Intrinsically safe
Available input sources	NAMUR proximity sensors (EN 60947-5-6)
Short-circuit current	~ 8 mA
Switching hysteresis	< 0.2 mA
Line fault detection	Break 0.05 mA < IIN < 0.35 mA
	Short circuit 100 Ω < RSensor < 360 Ω

Output data

Switching output	Relay output
Contact type	2 N/O contacts
Contact material	$AgSnO_2$, hard gold-plated
Maximum switching voltage	250 V AC (2 A)
	120 V DC (0.2 A)
	30 V DC (2 A)
Maximum switching capacity	500 VA
Mechanical service life	10^7 cycles
Switching frequency	≤ 20 Hz (without load)

Power supply

Nominal supply voltage	24 V DC -20 % ... +25 %
Supply voltage range	19.2 V DC ... 30 V DC (24 V DC -20%...+25%)
Max. current consumption	30 mA (24 V DC)
Power dissipation	< 950 mW
Power consumption	< 950 mW

Connection data

Connection method	Screw connection
Stripping length	7 mm
Screw thread	M3
Conductor cross section solid	0.2 mm² ... 2.5 mm²
Conductor cross section flexible	0.2 mm² ... 2.5 mm²

Isolation amplifier - MACX MCR-EX-SL-NAM-2RO - 2865450

Technical data

Connection data

Conductor cross section AWG	24 ... 14
Torque	0.5 Nm ... 0.6 Nm

General

No. of channels	1
Status display	Green LED (supply voltage)
	LED yellow (switching state)
	Red LED (line errors)
Electromagnetic compatibility	Conformance with EMC directive
Interference emission	EN 61000-6-4
Housing material	PA 6.6-FR
Color	gray
Designation	Input/output
Electrical isolation	375 V (Peak value in accordance with IEC/EN 60079-11)
Designation	Input/supply, DIN rail connector
Electrical isolation	375 V (Peak value in accordance with IEC/EN 60079-11)
Designation	Output 1/output 2/input, power supply, DIN rail connector
	Output 1/output 2/input/power supply, DIN rail connector

Safety characteristic data

Integrity requirement	IEC 61508 - Low demand
Designation	Non-inverted operation
Equipment type	Type A
Safety Integrity Level (SIL)	2
Safe Failure Fraction (SFF)	78 %
λ_{SU}	2.49×10^{-7} (249 FIT)
λ_{SD}	6×10^{-9} (6 FIT)
λ_{DU}	6.4×10^{-8} (64 FIT)
λ_{DD}	7×10^{-9} (7 FIT)
Probability of a hazardous failure on demand (PFD_{AVG})	3.09×10^{-4} (1 year)
	6.17×10^{-4} (2 years)
	1.54×10^{-3} (5 years)
Diagnostic coverage (DC)	DC_S = 2.4 %, DC_D = 9 %
Integrity requirement	IEC 61508 - Low demand
Designation	Inverted operation
Equipment type	Type A
Safety Integrity Level (SIL)	2
Safe Failure Fraction (SFF)	78 %
λ_{SU}	2.48×10^{-7} (248 FIT)
λ_{SD}	1×10^{-9} (1 FIT)

Isolation amplifier - MACX MCR-EX-SL-NAM-2RO - 2865450

Technical data

Safety characteristic data

λ_{DU}	6.2 x 10^{-8} (62 FIT)
λ_{DD}	6 x 10^{-9} (6 FIT)
Probability of a hazardous failure on demand (PFD_{AVG})	3.01 x 10^{-4} (1 year)
	6.02 x 10^{-4} (2 years)
	1.5 x 10^{-3} (5 years)
Diagnostic coverage (DC)	DC_S = 0.4 %, DC_D = 8 %
Safety Integrity Level (SIL)	1

Safety data

Max. internal inductance L_i	negligible
Max. internal capacitance C_i	11 nF
Max. output voltage U_o	9.6 V
Max. output current I_o	10 mA
Max. output power P_o	25 mW
Group	IIC
Max. external inductivity L_o	300 mH
Max. external capacitance C_o	3.6 µF
Additional text	simple circuit
Group	IIC
Max. external inductivity L_o	100 mH
Max. external capacitance C_o	500 nF
Additional text	mixed circuit
Group	IIC
Max. external inductivity L_o	50 mH
Max. external capacitance C_o	570 nF
Additional text	mixed circuit
Group	IIC
Max. external inductivity L_o	5 mH
Max. external capacitance C_o	590 nF
Additional text	mixed circuit
Group	IIC
Max. external inductivity L_o	1 mH
Max. external capacitance C_o	550 nF
Additional text	mixed circuit
Group	IIC
Max. external inductivity L_o	10 µH
Max. external capacitance C_o	590 nF
Additional text	mixed circuit
Group	IIB/IIIC
Max. external inductivity L_o	1000 mH

Isolation amplifier - MACX MCR-EX-SL-NAM-2RO - 2865450

Technical data

Safety data

Max. external capacitance C_o	26 µF
Additional text	simple circuit
Group	IIB/IIIC
Max. external inductivity L_o	100 mH
Max. external capacitance C_o	1 µF
Additional text	mixed circuit
Group	IIB/IIIC
Max. external inductivity L_o	5 mH
Max. external capacitance C_o	1 µF
Additional text	mixed circuit
Group	IIB/IIIC
Max. external inductivity L_o	1 mH
Max. external capacitance C_o	1 µF
Additional text	mixed circuit
Group	IIB/IIIC
Max. external inductivity L_o	10 µH
Max. external capacitance C_o	1 µF
Additional text	mixed circuit
Safety-related maximum voltage U_m	253 V AC (125 V DC)

Standards and Regulations

Electromagnetic compatibility	Conformance with EMC directive
Noise emission	EN 61000-6-4
Conformance	CE-compliant, additionally EN 61326
ATEX	# II (1) G [Ex ia Ga] IIC
	# II (1) D [Ex ia Da] IIIC
	# II 3 (1) G Ex nA nC [ia Ga] IIC T4 Gc
IECEx	[Ex ia Ga] IIC
	[Ex ia Da] IIIC
	Ex nA nC [ia Ga] IIC T4 Gc
UL, USA/Canada	Class I Div 2; IS for Class I, II, III Div 1
	UL 61010 Listed
DNV GL-Temperature	B
DNV GL-Humidity	B
DNV GL-Vibration	A
DNV GL-EMC	B
DNV GL-Enclosure	Required protection according to the Rules shall be provided upon installation on board
Group	IIC
	IIC
	IIC

Isolation amplifier - MACX MCR-EX-SL-NAM-2RO - 2865450

Technical data

Standards and Regulations

	IIC
	IIC
	IIC

Conformance/approvals

Designation	CE
Identification	CE-compliant
Additional text	and EN 61326
Designation	ATEX
Identification	# II (1) G [Ex ia Ga] IIC
	# II (1) D [Ex ia Da] IIIC
	# II 3 (1) G Ex nA nC [ia Ga] IIC T4 Gc
Certificate	IBExU 07 ATEX 1069 X
Designation	IECEx
Identification	[Ex ia Ga] IIC
	[Ex ia Da] IIIC
	Ex nA nC [ia Ga] IIC T4 Gc
Certificate	IECEx IBE 08.0001X
Designation	UL, USA/Canada
Identification	UL 61010 Listed
	Class I, Div. 2, Groups A, B, C, D T4
	Class I, Div. 2, Groups IIC, IIB, IIA T4
	Associated apparatus for use in Class I, Division 1, Groups A,B,C,D
	Associated apparatus for use in Class II, Div.1 Groups E,F,D
	Associated apparatus for use in Class III, Division 1
	Associated apparatus for use in Class I, Zone 0,1,2, Groups IIC,IIB,IIA
Certificate	#, C.D.-No 83104549
Designation	UL, USA/Canada
Identification	Class I Div 2; IS for Class I, II, III Div 1
	UL 61010 Listed
Certificate	#, C.D.-No 83104549
Designation	KC-s
Identification	[Ex ia] IIC/IIB
Certificate	17-KA4BO-0409X
Designation	Shipbuilding approval
Certificate	DNV GL TAA00000AG
Designation	Safety Integrity Level (SIL, IEC 61508)
Identification	2
Designation	INMETRO
Identification	[Ex ia Ga] IIC
	[Ex ia Da] IIIC

Isolation amplifier - MACX MCR-EX-SL-NAM-2RO - 2865450

Technical data

Conformance/approvals

	Ex nA nC [ia Ga] IIC T4 Gc
Certificate	DNV 18.0114 X
Designation	EAC Ex
Identification	# [Ex ia Ga] IIC
	# [Ex ia Da] IIIC
Certificate	RU C-DE.AB72.B.00093/19
Temperature	B
Humidity	B
Vibration	A
EMC	B
Enclosure	Required protection according to the Rules shall be provided upon installation on board

Environmental Product Compliance

REACh SVHC	Lead 7439-92-1
China RoHS	Environmentally Friendly Use Period = 50 years
	For details about hazardous substances go to tab “Downloads”, Category “Manufacturer's declaration”

Drawings

Isolation amplifier - MACX MCR-EX-SL-NAM-2RO - 2865450

Block diagram

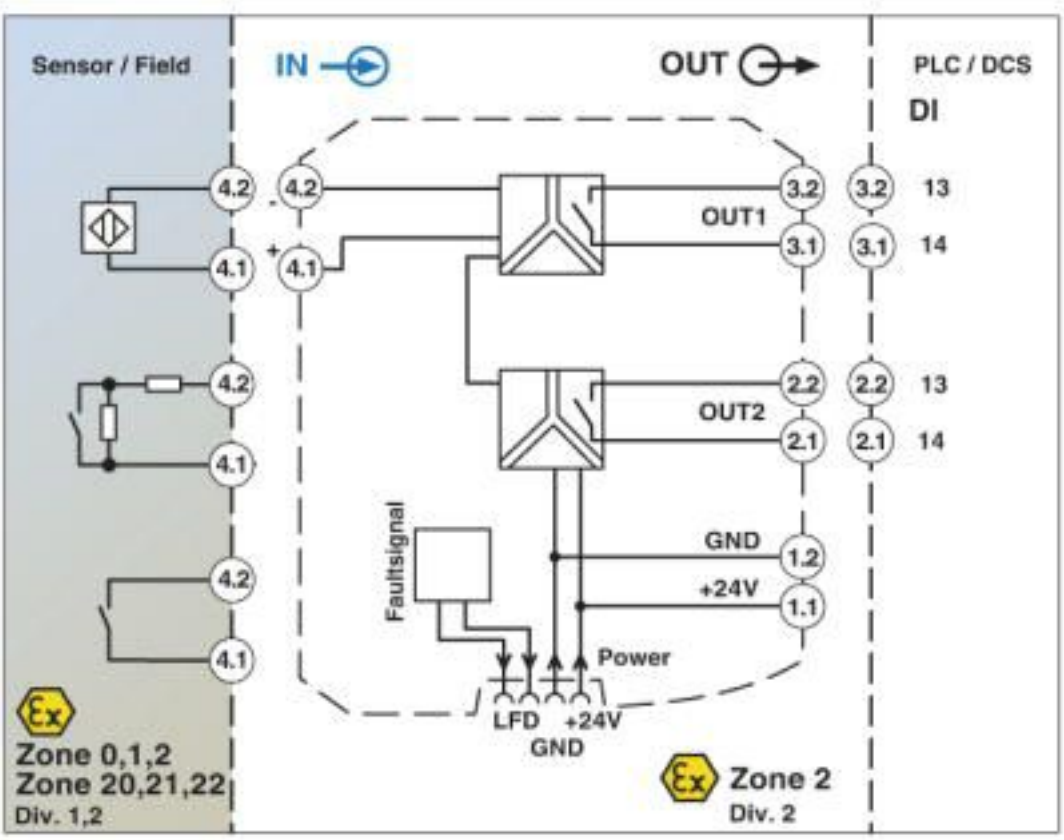

Isolation amplifier - MACX MCR-EX-SL-NAM-2RO - 2865450

Dimensional drawing

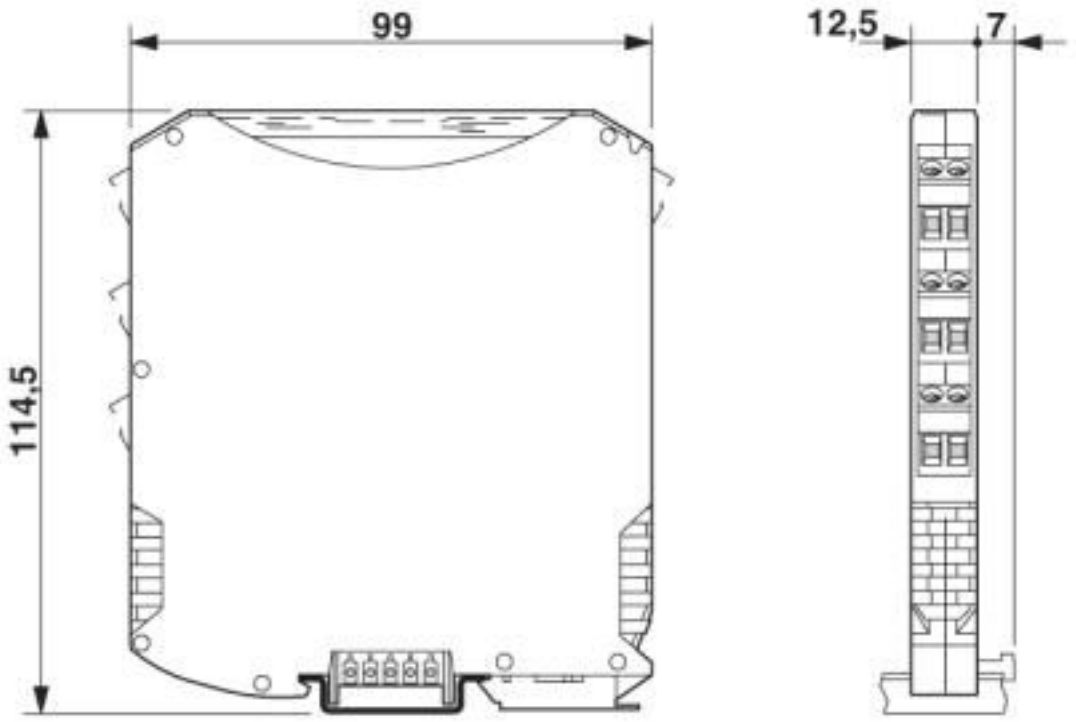

Pictogram

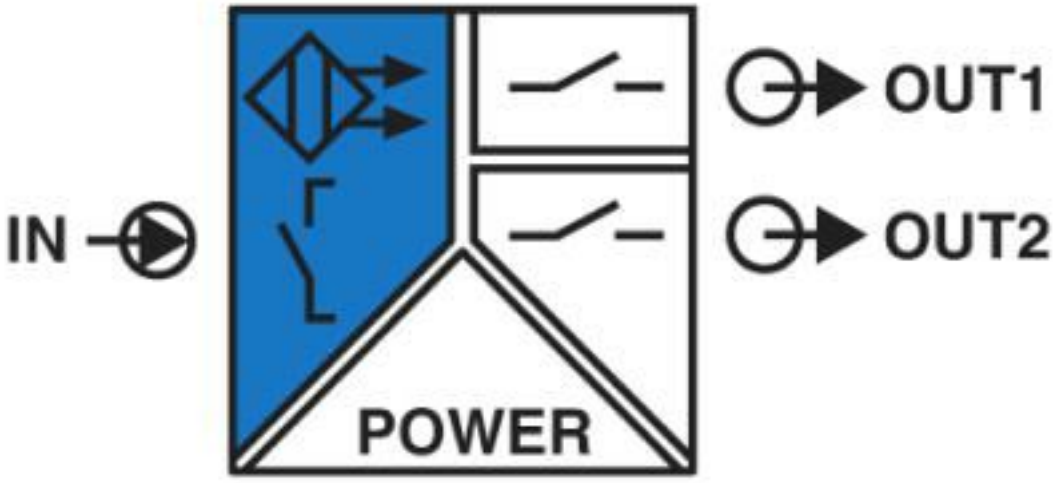

Classifications

eCl@ss

eCl@ss 10.0.1	27210121
eCl@ss 4.0	27210100
eCl@ss 4.1	27210100
eCl@ss 5.0	27210100

Isolation amplifier - MACX MCR-EX-SL-NAM-2RO - 2865450

Classifications

eCl@ss

eCl@ss 5.1	27210100
eCl@ss 6.0	27210100
eCl@ss 7.0	27210121
eCl@ss 8.0	27210121
eCl@ss 9.0	27210121

ETIM

ETIM 2.0	EC001485
ETIM 3.0	EC001485
ETIM 4.0	EC001485
ETIM 5.0	EC001485
ETIM 6.0	EC001485
ETIM 7.0	EC001485

UNSPSC

UNSPSC 6.01	30211506
UNSPSC 7.0901	39121008
UNSPSC 11	39121008
UNSPSC 12.01	39121008
UNSPSC 13.2	39121008
UNSPSC 18.0	39121008
UNSPSC 19.0	39121008
UNSPSC 20.0	39121008
UNSPSC 21.0	39121008

Approvals

Approvals

Approvals

DNV GL / UL Listed / cUL Listed / Functional Safety / cULus Listed

Ex Approvals

KC-s / IECEx / ATEX / UL Listed / cUL Listed / EAC Ex / INMETRO / cULus Listed

Approval details

DNV GL	https://approvalfinder.dnvgl.com/	TAA00000AG

Isolation amplifier - MACX MCR-EX-SL-NAM-2RO - 2865450

Approvals

UL Listed		http://database.ul.com/cgi-bin/XYV/template/LISEXT/1FRAME/index.htm	FILE E 330267

cUL Listed		http://database.ul.com/cgi-bin/XYV/template/LISEXT/1FRAME/index.htm	FILE E 330267

Functional Safety	07-06-39 R005 V2R2

cULus Listed	

Accessories

Accessories

Component terminal block

Component terminal block - UKK 5-2R/NAMUR - 2941662



Double-level terminal block, with preassembled resistors

Device marking

Plastic label - UC-EMLP (11X9) - 0819291



Plastic label, Sheet, white, unlabeled, can be labeled with: BLUEMARK ID COLOR, BLUEMARK ID, BLUEMARK CLED, PLOTMARK, CMS-P1-PLOTTER, mounting type: adhesive, lettering field size: 11 x 9 mm, Number of individual labels: 10

Plastic label - UC-EMLP (11X9) YE - 0822602



Plastic label, Sheet, yellow, unlabeled, can be labeled with: BLUEMARK ID COLOR, BLUEMARK ID, BLUEMARK CLED, PLOTMARK, CMS-P1-PLOTTER, mounting type: adhesive, lettering field size: 11 x 9 mm, Number of individual labels: 10

Isolation amplifier - MACX MCR-EX-SL-NAM-2RO - 2865450

Accessories

Plastic label - UC-EMLP (11X9) SR - 0828094



Plastic label, Sheet, silver, unlabeled, can be labeled with: BLUEMARK ID COLOR, BLUEMARK ID, BLUEMARK CLED, PLOTMARK, CMS-P1-PLOTTER, mounting type: adhesive, lettering field size: 11 x 9 mm, Number of individual labels: 10

Plastic label - US-EMLP (11X9) - 0828789



Plastic label, Card, white, unlabeled, can be labeled with: BLUEMARK ID COLOR, BLUEMARK ID, THERMOMARK PRIME, THERMOMARK CARD 2.0, THERMOMARK CARD, mounting type: adhesive, lettering field size: 11 x 9 mm, Number of individual labels: 135

Plastic label - US-EMLP (11X9) YE - 0828871



Plastic label, Card, yellow, unlabeled, can be labeled with: BLUEMARK ID COLOR, BLUEMARK ID, THERMOMARK PRIME, THERMOMARK CARD 2.0, THERMOMARK CARD, mounting type: adhesive, lettering field size: 11 x 9 mm, Number of individual labels: 135

Plastic label - US-EMLP (11X9) SR - 0828872



Plastic label, Card, silver, unlabeled, can be labeled with: BLUEMARK ID COLOR, BLUEMARK ID, THERMOMARK PRIME, THERMOMARK CARD 2.0, THERMOMARK CARD, mounting type: adhesive, lettering field size: 11 x 9 mm, Number of individual labels: 135

Device marker - LS-EMLP (11X9) WH - 0831678



Device marker, Sheet, white, unlabeled, can be labeled with: TOPMARK NEO, TOPMARK LASER, mounting type: adhesive, lettering field size: 11 x 9 mm, Number of individual labels: 255

Isolation amplifier - MACX MCR-EX-SL-NAM-2RO - 2865450

Accessories

Device marker - LS-EMLP (11X9) YE - 0831732



Device marker, Sheet, yellow, unlabeled, can be labeled with: TOPMARK NEO, TOPMARK LASER, mounting type: adhesive, lettering field size: 11 x 9 mm, Number of individual labels: 255

Device marker - LS-EMLP (11X9) SR - 0831705



Device marker, Sheet, silver, unlabeled, can be labeled with: TOPMARK NEO, TOPMARK LASER, mounting type: adhesive, lettering field size: 11 x 9 mm, Number of individual labels: 255

DIN rail connector

DIN rail bus connectors - ME 6,2 TBUS-2 1,5/5-ST-3,81 GY - 2695439



DIN rail connector (TBUS), 5-pos., for bridging the supply voltage, can be snapped onto NS 35/... DIN rails according to EN 60715

End cover

End cover - D-UKK 3/5 - 2770024



End cover, length: 56 mm, width: 2.5 mm, height: 52 mm, color: gray

---

End cover - D-UKK 3/5 BU - 2770105



End cover, length: 56 mm, width: 2.5 mm, height: 62 mm, color: blue

---

Insulating sleeve

Isolation amplifier - MACX MCR-EX-SL-NAM-2RO - 2865450

Accessories

Insulating sleeve - MPS-IH BK - 0201731

Insulating sleeve, color: black



Insulating sleeve - MPS-IH GY - 0201728

Insulating sleeve, color: gray



Insulating sleeve - MPS-IH GN - 0201702

Insulating sleeve, color: green



Insulating sleeve - MPS-IH YE - 0201692

Insulating sleeve, color: yellow



Insulating sleeve - MPS-IH BU - 0201689

Insulating sleeve, color: blue



Isolation amplifier - MACX MCR-EX-SL-NAM-2RO - 2865450

Accessories

Insulating sleeve - MPS-IH RD - 0201676



Insulating sleeve, color: red

Insulating sleeve - MPS-IH WH - 0201663



Insulating sleeve, color: white

Labeled device marker

Plastic label - UC-EMLP (11X9) CUS - 0824547



Plastic label, can be ordered: by sheet, white, labeled according to customer specifications, mounting type: adhesive, lettering field size: 11 x 9 mm

Plastic label - UC-EMLP (11X9) YE CUS - 0824548



Plastic label, can be ordered: by sheet, yellow, labeled according to customer specifications, mounting type: adhesive, lettering field size: 11 x 9 mm

Plastic label - UC-EMLP (11X9) SR CUS - 0828098



Plastic label, can be ordered: by sheet, silver, labeled according to customer specifications, mounting type: adhesive, lettering field size: 11 x 9 mm, Number of individual labels: 10

Module carrier

Isolation amplifier - MACX MCR-EX-SL-NAM-2RO - 2865450

Accessories

Module carrier - TC-2D37SUB-ADIO32-2EX-P-UNI - 2904684



Universal Termination Carrier for connecting 16 two-channel MACX Analog Ex i signal conditioners to digital or analog I/O cards, via two D-SUB connectors, 37-pos. (1:1 connection)

Power module

Power and error message module - MACX MCR-PTB - 2865625



Power and fault signaling module with screw connection, including corresponding ME 17,5 TBUS 1,5/ 5-ST-3,81 GY DIN rail connector

Power and error message module - MACX MCR-PTB-SP - 2924184



Power and fault signaling module with Push-in connection, including corresponding ME 17,5 TBUS 1,5/ 5-ST-3,81 GY DIN rail connector

Test plug terminal block

Test plugs - MPS-MT - 0201744



Test plugs, with solder connection up to 1 mm² conductor cross section, color: gray

Phoenix Contact 2020 © - all rights reserved
http://www.phoenixcontact.com

PHOENIX CONTACT GmbH & Co. KG
Flachsmarktstr. 8
32825 Blomberg
Germany
Tel. +49 5235 300
Fax +49 5235 3 41200
http://www.phoenixcontact.com