Isolation amplifier - MACX MCR-SL-NAM-2RO - 2865010

Please be informed that the data shown in this PDF Document is generated from our Online Catalog. Please find the complete data in the user's documentation. Our General Terms of Use for Downloads are valid (http://phoenixcontact.com/download)



NAMUR signal conditioner for operating proximity sensors and switches. The signals are transferred to the control level using 2 isolated relay outputs (N/O contact). Line fault detection (LFD), 3-way electrical isolation, SIL 2, screw connection.

Your advantages

- Power supply and error indication possible via DIN rail connector
- Installation in zone 2, protection type "n" (EN 60079-15) permitted
- Up to SIL 2 according to EN 61508
- Line fault detection (LFD), can be activated/deactivated, error indicated by red flashing LED with de-excitation of output relay
- Input for NAMUR proximity sensors (EN 60947-5-6), floating contacts or contacts with resistance circuit
- 4-way electrical isolation
- Direction of operation can be selected (operating or closed circuit current behavior)
- 2 relay signal outputs (N/O contact); output 2 can also be used as an error signaling output
- LED indicators for supply voltage, switching state, and malfunction according to NAMUR NE 44

Key Commercial Data

Packing unit	1 pc
GTIN	4 046356 491686
GTIN	4046356491686

Technical data

Note

Utilization restriction	EMC: class A product, see manufacturer's declaration in the download area

Dimensions

Width	12.5 mm
Height	112.5 mm
Depth	114.5 mm

Isolation amplifier - MACX MCR-SL-NAM-2RO - 2865010

Technical data

Ambient conditions

Ambient temperature (operation)	-20 °C ... 60 °C (Any mounting position)
Ambient temperature (storage/transport)	-40 °C ... 85 °C
Maximum altitude	≤ 2000 m
Permissible humidity (operation)	10 % ... 95 % (non-condensing)
Noise immunity	EN 61000-6-2 EN 61326

Input data

Non-load voltage	~ 8 V DC
Switching points (attenuated)	< 1.2 mA (blocking)
Switching points (unattenuated)	> 2.1 mA (conductive)
Available input sources	NAMUR proximity sensors (EN 60947-5-6)
Short-circuit current	~ 8 mA
Switching hysteresis	< 0.2 mA
Line fault detection	Break 0.05 mA < IIN < 0.35 mA
	Short circuit 100 Ω < RSensor < 360 Ω

Output data

Switching output	Relay output
Contact type	2 N/O contacts
Contact material	$AgSnO_2$, hard gold-plated
Maximum switching voltage	250 V AC (2 A)
	120 V DC (0.2 A)
	30 V DC (2 A)
Maximum switching capacity	500 VA
Mechanical service life	10^7 cycles
Switching frequency	≤ 20 Hz (without load)

Power supply

Nominal supply voltage	24 V DC
Supply voltage range	19.2 V DC ... 30 V DC (24 V DC -20%...+25%)
Max. current consumption	30 mA (24 V DC)
Power dissipation	< 950 mW
Power consumption	< 950 mW

Connection data

Conductor cross section solid min.	0.2 mm²
Conductor cross section solid max.	2.5 mm²
Conductor cross section flexible min.	0.2 mm²
Conductor cross section flexible max.	2.5 mm²
Conductor cross section AWG min.	24
Conductor cross section AWG max.	14
Stripping length	7 mm
Screw thread	M3

Isolation amplifier - MACX MCR-SL-NAM-2RO - 2865010

Technical data

Connection data

Connection method	Screw connection
Tightening torque, min	0.5 Nm
Tightening torque max	0.6 Nm

General

No. of channels	1
Status display	Green LED (supply voltage)
	LED yellow (switching state)
	Red LED (line errors)
Flammability rating according to UL 94	V0
Degree of pollution	2
Overvoltage category	III
Electromagnetic compatibility	Conformance with EMC directive
Interference emission	EN 61000-6-4
Housing material	PA 6.6-FR
Color	green
Designation	Input/supply, DIN rail connector
Electrical isolation	300 V_{rms} (Rated insulation voltage (overvoltage category II; degree of pollution 2, safe isolation as per EN 61010-1))
Designation	Output 1/output 2/input, power supply, DIN rail connector
Electrical isolation	300 V_{rms} (Rated insulation voltage (overvoltage category III; degree of pollution 2, safe isolation as per EN 61010-1))
Designation	Output 1/output 2/input/power supply, DIN rail connector
Electrical isolation	2.5 kV (50 Hz, 1 min., test voltage)
Conformance	CE-compliant, additionally EN 61326-1
ATEX	# II 3 G Ex nA nC IIC T4 Gc X
UL, USA/Canada	UL 508 Listed
	UL 61010 Listed
	Class I, Div. 2, Groups A, B, C, D T4
	Class I, Zone 2, Group IIC T4
GL	C, EMC1
SIL	2

Safety characteristic data

Integrity requirement	IEC 61508 - Low demand
Designation	Non-inverted operation
Equipment type	Type A
Safety Integrity Level (SIL)	2
Safe Failure Fraction (SFF)	78 %
λ_{SU}	2.49 x 10^{-7} (249 FIT)
λ_{SD}	6 x 10^{-9} (6 FIT)
λ_{DU}	6.4 x 10^{-8} (64 FIT)

Isolation amplifier - MACX MCR-SL-NAM-2RO - 2865010

Technical data

Safety characteristic data

λ_{DD}	7 x 10^{-9} (7 FIT)
Probability of a hazardous failure on demand (PFD_{AVG})	3.09 x 10^{-4} (1 year)
	6.17 x 10^{-4} (2 years)
	1.54 x 10^{-3} (5 years)
Diagnostic coverage (DC)	DC_S = 2.4 %, DC_D = 9 %
Integrity requirement	IEC 61508 - Low demand
Designation	Inverted operation
Equipment type	Type A
Safety Integrity Level (SIL)	2
Safe Failure Fraction (SFF)	78 %
λ_{SU}	2.48 x 10^{-7} (248 FIT)
λ_{SD}	1 x 10^{-9} (1 FIT)
λ_{DU}	6.2 x 10^{-8} (62 FIT)
λ_{DD}	6 x 10^{-9} (6 FIT)
Probability of a hazardous failure on demand (PFD_{AVG})	3.01 x 10^{-4} (1 year)
	6.02 x 10^{-4} (2 years)
	1.5 x 10^{-3} (5 years)
Diagnostic coverage (DC)	DC_S = 0.4 %, DC_D = 8 %
Safety Integrity Level (SIL)	1

Standards and Regulations

Electromagnetic compatibility	Conformance with EMC directive
Noise emission	EN 61000-6-4
Flammability rating according to UL 94	V0
Conformance	CE-compliant, additionally EN 61326-1
ATEX	# II 3 G Ex nA nC IIC T4 Gc X
UL, USA/Canada	UL 508 Listed
	UL 61010 Listed
	Class I, Div. 2, Groups A, B, C, D T4
	Class I, Zone 2, Group IIC T4
GL	C, EMC1

Environmental Product Compliance

REACh SVHC	Lead 7439-92-1
China RoHS	Environmentally Friendly Use Period = 50
	For details about hazardous substances go to tab “Downloads”, Category “Manufacturer's declaration”

Drawings

Isolation amplifier - MACX MCR-SL-NAM-2RO - 2865010

Block diagram

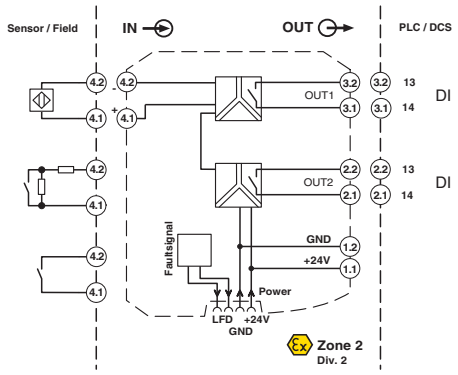

Dimensional drawing

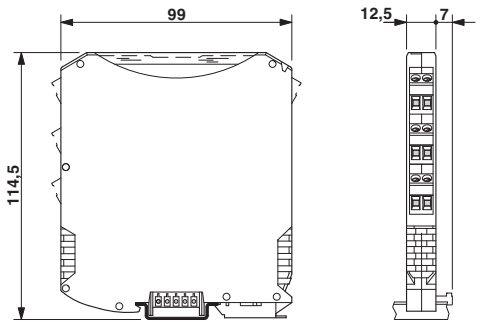

Pictogram

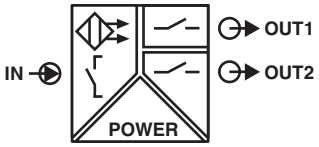

Approvals

Approvals

Approvals

Functional Safety / UL Listed / cUL Listed / DNV GL / cULus Listed

Ex Approvals

UL Listed / cUL Listed / ATEX / cULus Listed

Approval details

Functional Safety	07-06-39 R005 V2R2

UL Listed		http://database.ul.com/cgi-bin/XYV/template/LISEXT/1FRAME/index.htm	FILE E 330267

Isolation amplifier - MACX MCR-SL-NAM-2RO - 2865010

Approvals

cUL Listed		http://database.ul.com/cgi-bin/XYV/template/LISEXT/1FRAME/index.htm	FILE E 330267

DNV GL	http://exchange.dnv.com/tari/	TAA00000AG

cULus Listed	

Phoenix Contact 2018 © - all rights reserved
http://www.phoenixcontact.com

PHOENIX CONTACT GmbH & Co. KG
Flachsmarktstr. 8
32825 Blomberg
Germany
Tel. +49 5235 300
Fax +49 5235 3 41200
http://www.phoenixcontact.com