Data sheet | Item number: 286-368

Relay module; Nominal input voltage: 24 VDC; 1 break contact; Limiting continuous current: 5 A; Red status indicator; Module width: 10 mm; gray

www.wago.com/286-368



Color:

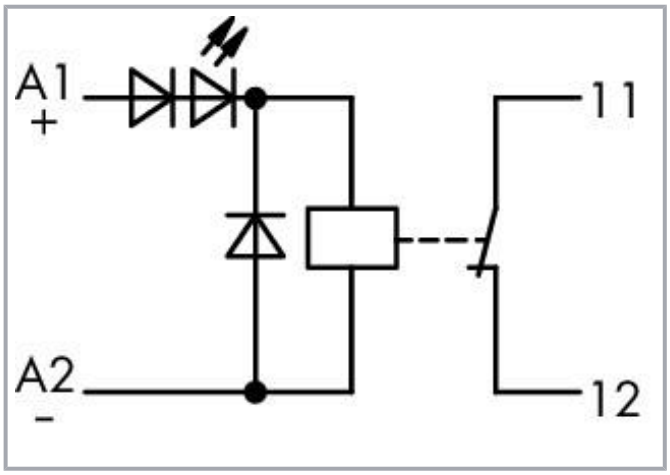

Subject to changes. Please also observe the further product documentation!

WAGO GmbH & Co. KG
Hansastr. 27
32423 Minden
Phone: +49571 887-0 | Fax: +49571 887-169
Email: info.de@wago.com | Web: www.wago.com

Do you have any questions about our products?
We are always happy to take your call at +49 (571) 887-44222.

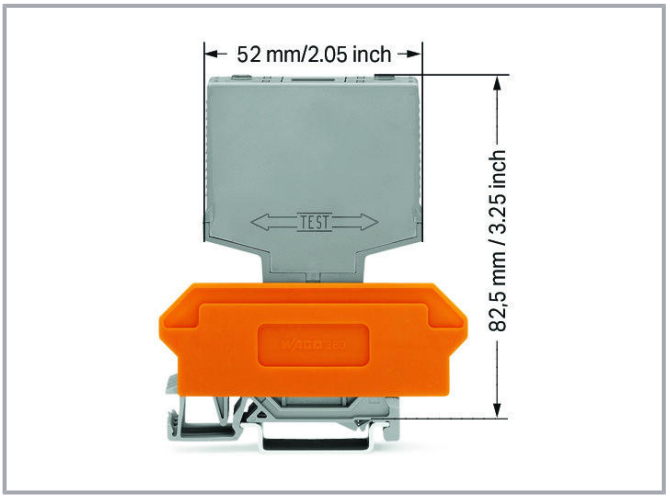

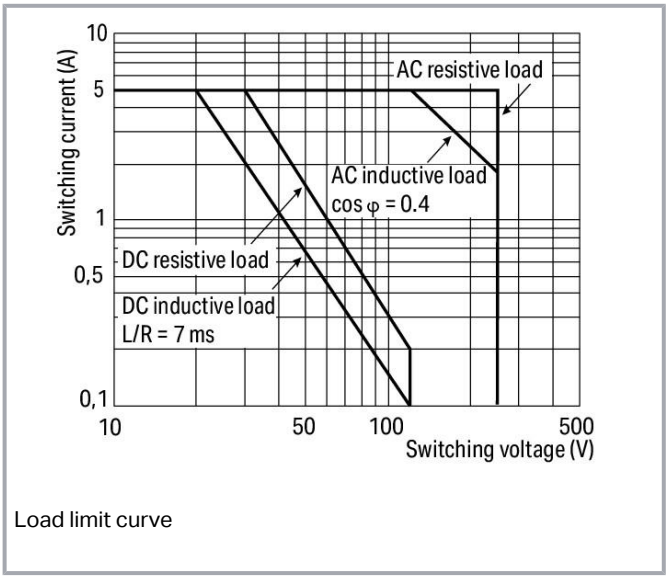

Load limit curve

Data

Technical data

Control circuit

Nominal input voltage U_N	DC 24 V
Input voltage range	±10 %
Nominal input current at U_N	20.4 mA

Load circuit

Number of break/switch-off contacts	1
Contact material (relay)	AgNi
Limiting continuous current	5 A
Switching voltage (max.)	AC 250 V
Switching power (resistive) (max.)	AC 1250 VA
Pull-in time (typ.)	10 ms
Drop-out time (typ.)	4 ms
Bounce time (typ.)	3 ms
Mechanical life	5 x 10^6 switching operations

Signaling

Status indicator	Red LED

Subject to changes. Please also observe the further product documentation!

WAGO GmbH & Co. KG
Hansastr. 27
32423 Minden
Phone: +49571 887-0 | Fax: +49571 887-169
Email: info.de@wago.com | Web: www.wago.com

Do you have any questions about our products?
We are always happy to take your call at +49 (571) 887-44222.

Safety and protection

Rated voltage	250 V
Rated surge voltage	4 kV
Pollution degree	2
Dielectric strength, control/load circuit (AC, 1 min)	4 kVrms
Protection type	IP20

Physical data

Width	10 mm / 0.394 inch
Height from upper-edge of DIN-rail	82.5 mm / 3.248 inch
Depth	52 mm / 2.047 inch

Mechanical data

Mounting type	Pluggable module for receptacle terminal blocks

Material data

Color	gray
Fire load	0.276 MJ
Weight	19.1 g

Environmental requirements

Surrounding air temperature (operation at U_N)	-25 … 40 °C
Surrounding air temperature (storage)	-25 … 70 °C
Processing temperature	-25 … +50 °C
Relative humidity	5 … 85 % (no condensation permissible)
Operating altitude (max.)	2000 m

Standards and specifications

Standards/Specifications	EN 60664-1

Commercial data

Product Group	6 (Interface Electronics)
PU (SPU)	25 (1) Stück
Packaging type	box

Subject to changes. Please also observe the further product documentation!

WAGO GmbH & Co. KG
Hansastr. 27
32423 Minden
Phone: +49571 887-0 | Fax: +49571 887-169
Email: info.de@wago.com | Web: www.wago.com

Do you have any questions about our products?
We are always happy to take your call at +49 (571) 887-44222.

Country of origin	DE
GTIN	4045454384036
Customs tariff number	85364900990

Optional accessories

Marking accessories

Marker



Item no.: 209-701
WSB marking card; as card; not stretchable; plain; snap-on type; white
www.wago.com/209-701

Terminal blocks

Terminal block for pluggable modules



Item no.: 280-608
Terminal block for pluggable modules; 4-pole; with 4-conductor terminal blocks; with orange separator; for DIN-rail 35 x 15 and 35 x 7.5; 2.5 mm²; CAGE CLAMP®; 2,50 mm²; gray
www.wago.com/280-608



Item no.: 280-618
Terminal block for pluggable modules; 4-pole; with 2-conductor terminal blocks; with orange separator; for DIN-rail 35 x 15 and 35 x 7.5; 2.5 mm²; CAGE CLAMP®; 2,50 mm²; gray
www.wago.com/280-618



Item no.: 280-762
Terminal block for pluggable modules; 4-pole; with 4-conductor terminal blocks; with marker carrier; with orange separator; for DIN-rail 35 x 15 and 35 x 7.5; 2.5 mm²; CAGE CLAMP®; 2,50 mm²; gray
www.wago.com/280-762

Downloads

Documentation

Bid Text

286-368 X81 - Datei	2019. 2. 19.	xml 3.7 kB	Download
286-368 doc - Datei	2018. 3. 22.	doc 26.1 kB	Download

Instruction Leaflet

		pdf 1.3 MB	Download

Additional Information

Disposal; Electrical and electronic equipment, Packaging	V 1.0.0	pdf 265.8 kB	Download

Subject to changes. Please also observe the further product documentation!

WAGO GmbH & Co. KG
Hansastr. 27
32423 Minden
Phone: +49571 887-0 | Fax: +49571 887-169
Email: info.de@wago.com | Web: www.wago.com

Do you have any questions about our products?
We are always happy to take your call at +49 (571) 887-44222.

CAD/CAE-Data

CAD data

2D/3D Models 286-368	URL	Download

CAE data

WSCAD Universe 286-368	URL	Download
ZUKEN Portal 286-368	URL	Download

Environmental Product Compliance

Compliance Search

Environmental Product Compliance 286-368 Relay module; Nominal input voltage: 24 VDC; 1 break contact; Limiting continuous current: 5 A; Red status indicator; Module width: 10 mm; gray	URL	Download

Installation Notes

Assembly

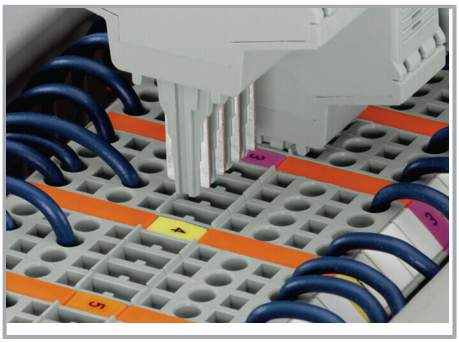

Coding ensures correct polarity.

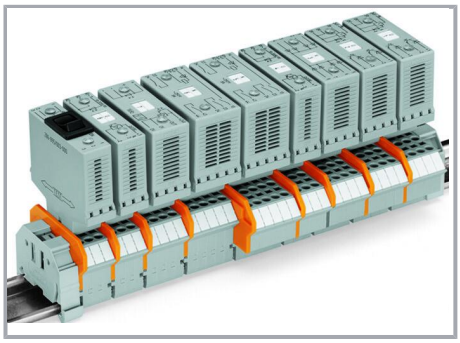

Pluggable electronic modules on 2- or 4-conductor carrier terminal blocks

Marking

WAGO GmbH & Co. KG
Hansastr. 27
32423 Minden
Phone: +49571 887-0 | Fax: +49571 887-169
Email: info.de@wago.com | Web: www.wago.com

Do you have any questions about our products?
We are always happy to take your call at +49 (571) 887-44222.

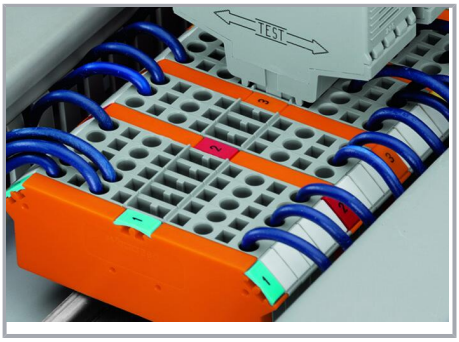

Marking via WMB Multi Marking System.

Testing



Function testing via touch-proof test slots

Subject to changes. Please also observe the further product documentation!

WAGO GmbH & Co. KG
Hansastr. 27
32423 Minden
Phone: +49571 887-0 | Fax: +49571 887-169
Email: info.de@wago.com | Web: www.wago.com

Do you have any questions about our products?
We are always happy to take your call at +49 (571) 887-44222.