Surge protection plug - PT 2X2-HF-24 DC-ST - 2839729

Please be informed that the data shown in this PDF Document is generated from our Online Catalog. Please find the complete data in the user's documentation. Our General Terms of Use for Downloads are valid (http://phoenixcontact.com/download)



Protective plug PT with HF protective circuit for two 2-core floating signal circuits. Nominal voltage: 24 V DC

Your advantages

- Plugs can be checked with CHECKMASTER
- Maximum ease of maintenance thanks to the two-piece design
- Base element remains an integral part of the installation
- Protection for fieldbus systems, PROFIBUS, and signal circuits with 3 to 5-wire technology
- Consistent plug-in signal circuit protection
- Impedance-neutral disconnection of plug for test and maintenance purposes

Key Commercial Data

Packing unit	10 pc
GTIN	4 017918 607210
GTIN	4017918607210

Technical data

Dimensions

Height	45 mm
Width	17.7 mm
Depth	52 mm
Horizontal pitch	1 Div.

Ambient conditions

Ambient temperature (operation)	-40 °C ... 85 °C
Degree of protection	IP20

General

Housing material	PA
Flammability rating according to UL 94	V-0

Surge protection plug - PT 2X2-HF-24 DC-ST - 2839729

Technical data

General

Color	black
Standards for cearances and creepage distances	DIN VDE 0110-1
	IEC 60664-1
Mounting type	on base element
Type	Male
Number of positions	5
Direction of action	Line-Line & Line-Signal Ground/Shield & optional Signal Ground/Shield-Earth Ground
Arrester can be tested with CHECKMASTER from software version:	From SW rev. 1.00

Protective circuit

IEC test classification	C1
	C2
	C3
	D1
VDE requirement class	C1
	C2
	C3
	D1
Nominal voltage U_N	24 V DC
Maximum continuous voltage U_C	28 V DC
	19.8 V AC
Rated current	450 mA (45 °C)
Operating effective current I_C at U_C	≤ 5 µA
Residual current I_{PE}	≤ 4 µA (with PT 2X2-BE)
	≤ 1 µA (with PT 2X2+F-BE)
Nominal discharge current I_n (8/20) µs (line-line)	10 kA
Nominal discharge current I_n (8/20) µs (line-earth)	10 kA
Pulse discharge current I_{imp} (10/350) µs	2.5 kA
Total discharge current I_{total} (8/20) µs	20 kA
Max. discharge current I_{max} (8/20) µs maximum (line-line)	10 kA
Max. discharge current I_{max} (8/20) µs maximum (line-earth)	10 kA
Nominal pulse current Ian (10/1000) µs (line-line)	30 A
Output voltage limitation at 1 kV/µs (line-line) spike	≤ 120 V
Output voltage limitation at 1 kV/µs (line-earth) spike	≤ 450 V
	≤ 1 kV (with PT 2X2+F-BE)
Output voltage limitation at 1 kV/µs (line-line) static	≤ 45 V
Output voltage limitation at 1 kV/µs (line-signalground) static	≤ 450 V
Residual voltage at I_n (line-line)	≤ 40 V
Residual voltage with Ian (10/1000) µs (line-line)	≤ 50 V
Voltage protection level U_p (line-line)	≤ 120 V (C2 - 10 kV / 5 kA)

Surge protection plug - PT 2X2-HF-24 DC-ST - 2839729

Technical data

Protective circuit

Voltage protection level U_p (line-earth)	≤ 450 V (C2 - 10 kV / 5 kA)
Response time t_A (line-line)	≤ 500 ns
Response time t_A (line-earth)	≤ 500 ns
Input attenuation aE, sym.	0.2 dB (≤ 5 MHz)
Cut-off frequency fg (3 dB), sym. in 100 Ohm system	typ. 70 MHz
Capacity (line-line)	typ. 30 pF
Resistance per path	2.2 Ω
Surge protection fault message	none
Max. required back-up fuse	500 mA (T)
Impulse durability (line-line)	C2 - 10 kV / 5 kA
Impulse durability (line-earth)	C2 - 10 kV / 5 kA
	D1 - 2.5 kA

Connection data

Connection method	Screw connection (in connection with the base element)
Conductor cross section flexible	0.2 mm² ... 2.5 mm²
Conductor cross section solid	0.2 mm² ... 4 mm²
Conductor cross section AWG	24 ... 12

Standards and Regulations

Standards/regulations	IEC 61643-21
Standards/specifications	IEC 61643-21 2000

Environmental Product Compliance

REACh SVHC	Lead 7439-92-1
China RoHS	Environmentally Friendly Use Period = 50 years
	For details about hazardous substances go to tab “Downloads”, Category “Manufacturer's declaration”

Drawings

Surge protection plug - PT 2X2-HF-24 DC-ST - 2839729

Dimensional drawing

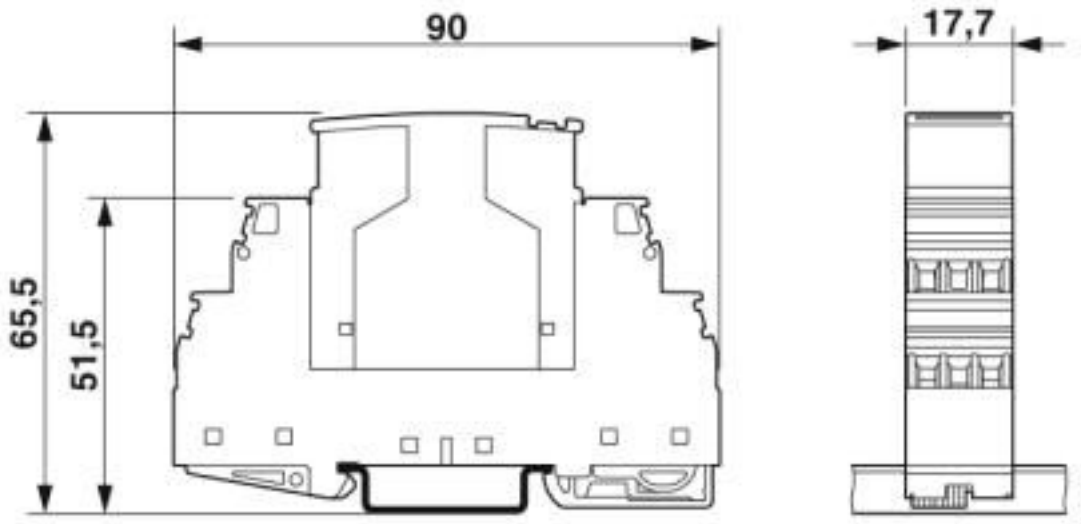

The figure shows the complete module consisting of a base element and connector

Circuit diagram

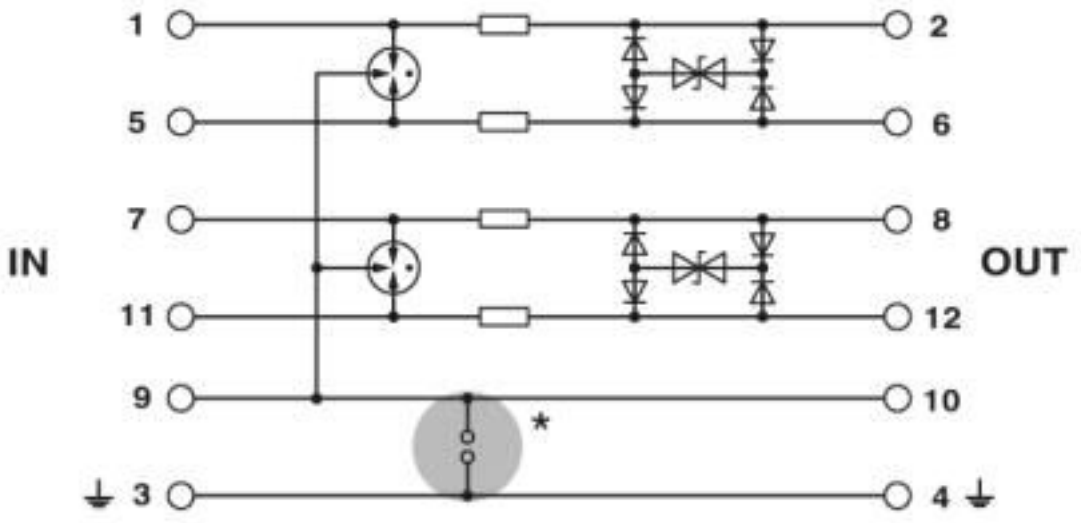

Classifications

eCl@ss

eCl@ss 10.0.1	27130807
eCl@ss 4.0	27130800
eCl@ss 4.1	27130800
eCl@ss 5.0	27130800
eCl@ss 5.1	27130800
eCl@ss 6.0	27130800
eCl@ss 7.0	27130807

Surge protection plug - PT 2X2-HF-24 DC-ST - 2839729

Classifications

eCl@ss

eCl@ss 8.0	27130807
eCl@ss 9.0	27130807

ETIM

ETIM 2.0	EC000943
ETIM 3.0	EC000943
ETIM 4.0	EC000943
ETIM 5.0	EC000943
ETIM 6.0	EC000943
ETIM 7.0	EC000943

UNSPSC

UNSPSC 6.01	30212010
UNSPSC 7.0901	39121610
UNSPSC 11	39121610
UNSPSC 12.01	39121610
UNSPSC 13.2	39121620
UNSPSC 18.0	39121620
UNSPSC 19.0	39121620
UNSPSC 20.0	39121620
UNSPSC 21.0	39121620

Approvals

Approvals

Approvals

UL Listed / EAC / EAC

Ex Approvals

UL Listed / cUL Listed / cULus Listed

Approval details

UL Listed		http://database.ul.com/cgi-bin/XYV/template/LISEXT/1FRAME/index.htm	FILE E 138168

Nominal voltage UN	24 V
Nominal current IN	0.45 A

Surge protection plug - PT 2X2-HF-24 DC-ST - 2839729

Approvals

EAC		EAC-Zulassung

EAC		RU C-DE.*09.B.00169

Accessories

Accessories

Device marking

Zack marker strip - ZBN 18:UNBEDRUCKT - 2809128



Zack marker strip, Strip, white, unlabeled, can be labeled with: CMS-P1-PLOTTER, PLOTMARK, mounting type: snap into tall marker groove, for terminal block width: 18 mm, lettering field size: 18 x 5 mm, Number of individual labels: 5

Labeled terminal marker

Zack Marker strip, flat - ZBF 5,LGS:FORTL.ZAHLEN - 0808671



Zack Marker strip, flat, Strip, white, labeled, printed horizontally: consecutive numbers 1 ... 10, 11 ... 20, etc. up to 491 ... 500, mounting type: snap into flat marker groove, for terminal block width: 5 mm, lettering field size: 5.15 x 5.15 mm, Number of individual labels: 10

Zack Marker strip, flat - ZBF 5,LGS:GERADE ZAHLEN - 0810821



Zack Marker strip, flat, Strip, white, labeled, printed horizontally: consecutive numbers 2 ... 20, 22 ... 40, etc. up to 82 ... 100, mounting type: snap into flat marker groove, for terminal block width: 5 mm, lettering field size: 5.15 x 5.15 mm, Number of individual labels: 10

Zack Marker strip, flat - ZBF 5,LGS:UNGERADE ZAHLEN - 0810863



Zack Marker strip, flat, Strip, white, labeled, printed horizontally: Odd numbers 1 - 19, 21 - 39, etc. up to 81 - 99, mounting type: snap into flat marker groove, for terminal block width: 5 mm, lettering field size: 5.15 x 5.15 mm, Number of individual labels: 10

Surge protection plug - PT 2X2-HF-24 DC-ST - 2839729

Accessories

Zack Marker strip, flat - ZBF 5,QR:FORTL.ZAHLEN - 0808697



Zack Marker strip, flat, Strip, white, labeled, Printed vertically: consecutive numbers 1 ... 10, 11 ... 20, etc. up to 91 ... 100, mounting type: snap into flat marker groove, for terminal block width: 5 mm, lettering field size: 5.15 x 5.15 mm, Number of individual labels: 10

Marker pen

Marker pen - X-PEN 0,35 - 0811228



Marker pen without ink cartridge, for manual labeling of markers, labeling extremely wipe-proof, line thickness 0.35 mm

Terminal marking

Zack Marker strip, flat - ZBF 5:UNBEDRUCKT - 0808642



Zack Marker strip, flat, Strip, white, unlabeled, can be labeled with: PLOTMARK, CMS-P1-PLOTTER, mounting type: snap into flat marker groove, for terminal block width: 5 mm, lettering field size: 5.1 x 5.2 mm, Number of individual labels: 10

Zack Marker strip, flat - ZBF 5/WH-100:UNBEDRUCKT - 0808668



Zack Marker strip, flat, Strip, white, unlabeled, can be labeled with: CMS-P1-PLOTTER, PLOTMARK, mounting type: snap into flat marker groove, for terminal block width: 5 mm, lettering field size: 5.15 x 5.15 mm, Number of individual labels: 10

Necessary add-on products

Surge protection base element - PT 2X2+F-BE - 2839224



Base element for protective plug PT with protective circuit for two 2-wire floating signal circuit, gas-filled surge arrester between the connections 3-4 (GND) and 9-10, for mounting on NS 35/7.5 and NS 35/15, housing width: 17.5 mm

Surge protection plug - PT 2X2-HF-24 DC-ST - 2839729

Accessories

Additional products

Shield connection - SSA 3-6 - 2839295



Shield fast connection for 3 ... 6 mm cable diameter. Potential connecting cable: 200 mm, 1 mm², color: black

Shield connection - SSA 5-10 - 2839512



Shield fast connection for 5 ... 10 mm cable diameter. Potential connecting cable: 200 mm, 1 mm², color: black

Phoenix Contact 2020 © - all rights reserved
http://www.phoenixcontact.com

PHOENIX CONTACT GmbH & Co. KG
Flachsmarktstr. 8
32825 Blomberg
Germany
Tel. +49 5235 300
Fax +49 5235 3 41200
http://www.phoenixcontact.com