KR Electronics

General Description

KR 2820-14.7 is a 14.7 MHz surface mount bandpass filter. The filter has a 3 dB bandwidth of 2.5 MHz. Other passband frequencies are available. Please consult the factory.

Features

- 14.7 MHz Center Frequency
- Surface Mount Package
- 50 Ω Source and Load

Typical Performance

Passband Amplitude & Group Delay

(1 dB/div and 100 nsec/div)

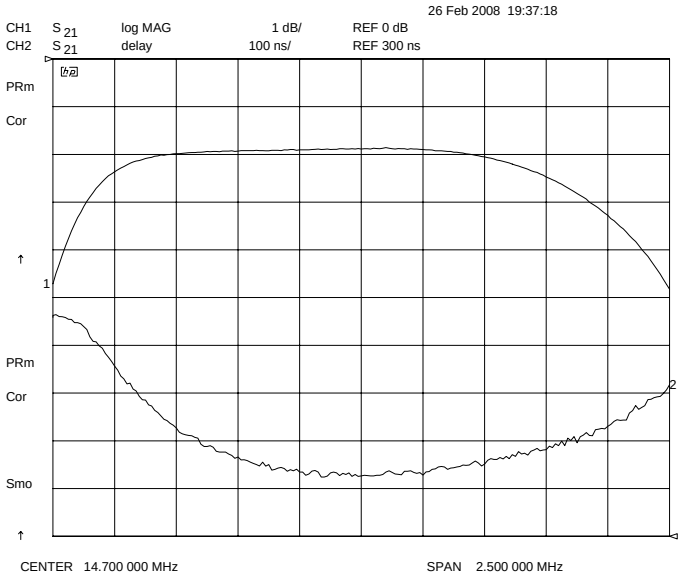

Overall Response

(10 dB/div)

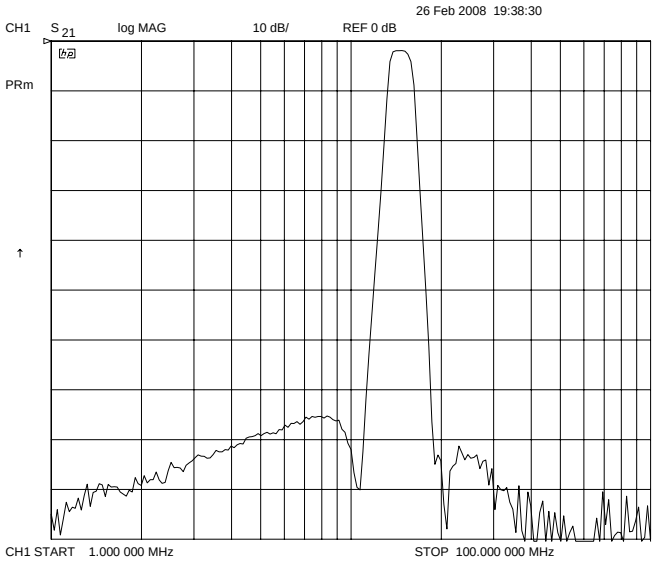

KR Electronics, Inc.
91 Avenel Street
Avenel, NJ 07001

Web *www.krfilters.com*
Email *sales@krfilters.com*
Phone *(732) 636-1900*
Fax *(732) 636-1982*

© 2008, KR Electronics, Inc.

KR Electronics 2820-14.7

Specifications

Parameter	Specification
Filter type	Bandpass
Center Frequency	14.7 MHz
Insertion Loss	< 3.5 dB (2 dB typical)
Attenuation at 13.45 MHz	3 dB ± 1 dB
Attenuation at 15.95 MHz	3 dB ± 1 dB
Attenuation at 10.95 MHz	> 60 dB
Attenuation at 18.45 MHz	> 60 dB
Source and Load	50 Ω

Physical Dimensions

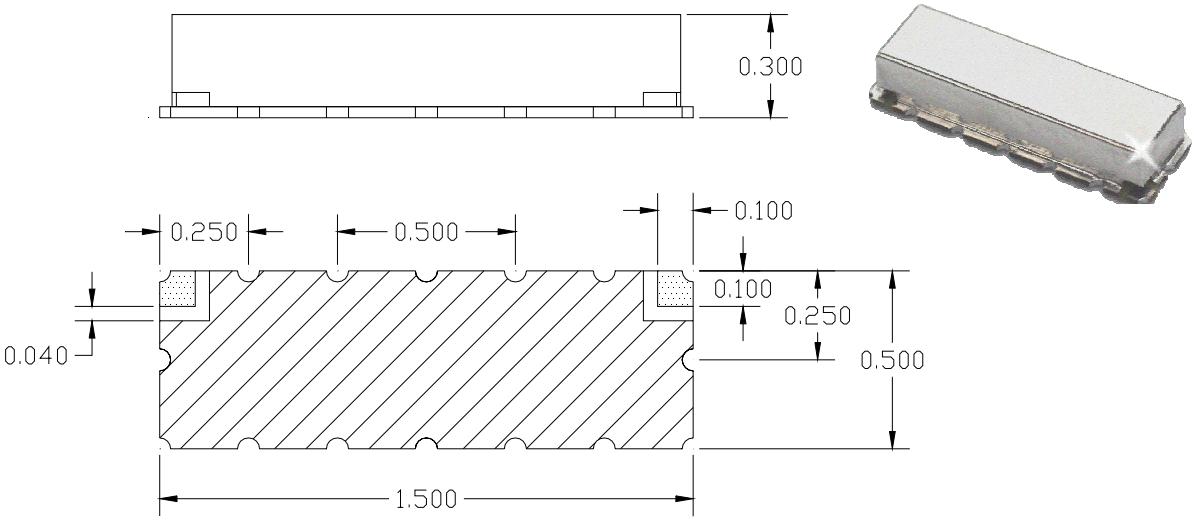

Notes:
1. Surface mount package — Metal cover, open frame
2. Dimensions in inches
3. Maximum reflow temperature 209° C for 10 seconds maximum
4. If boards are cleaned after installation, units must be completely dried

KR Electronics, Inc.
91 Avenel Street
Avenel, NJ 07001

Web *www.krfilters.com*
Email *sales@krfilters.com*
Phone *(732) 636-1900*
Fax *(732) 636-1982*

© 2008, KR Electronics, Inc.