ETRI®

DC Axial Fans

Series 281D

X, Z, Y, G speeds

2,362" x 2,362" x 0,984" 60 x 60 x 25 mm



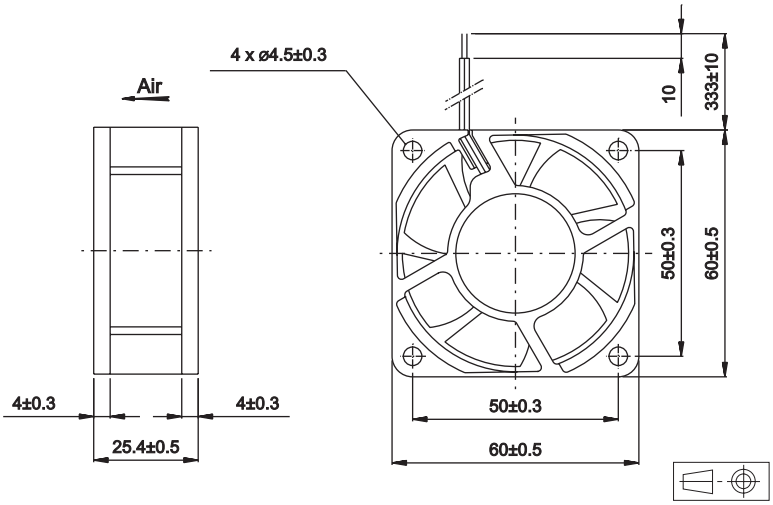

Approvals

CE cULus

Life expectancy

L-10 LIFE AT 40°C :
70 000 hours

Brushless DC Motor
Electrical protection: integrated circuit
Housing material: plastic UL 94 V0
Impeller material: plastic UL 94 V0
Maximum weight: 80 g
Bearing system: ball bearings
Connection: flying leads
IP 20

Available with:
- Speed sensor
- Alarm
- IP 54 / IP 55

Airflow: CFM

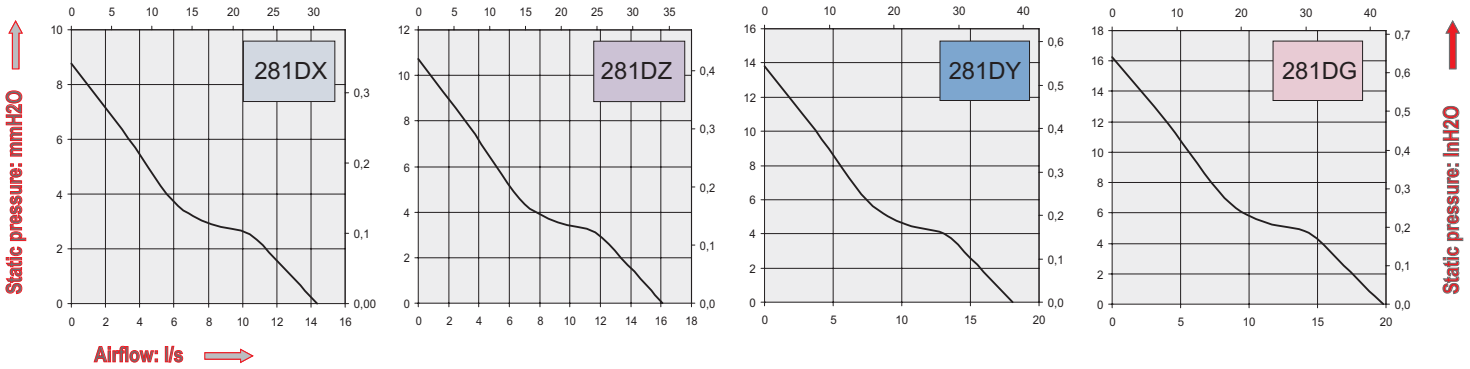

Part Number	Nominal voltage	Airflow	Noise level	Nominal speed	Input Power	Voltage range	Operating temperature	
	V	l/s	dB(A)	RPM	W	V	Min.°C	Max.°C
281DX1LP11000B	12	14,4	42,5	5500	2,76	(4-13,8)	-10	70
281DX2LP11000B	24	14,4	42,5	5500	3,36	(14-27,6)	-10	70
281DX4LP11000B	48	14,4	42,5	5500	4,32	(28-56)	-10	70
281DZ1LP11000B	12	16,1	44,5	6000	3,24	(4-13,8)	-10	70
281DZ2LP11000B	24	16,1	44,5	6000	4,08	(14-27,6)	-10	70
281DZ4LP11000B	48	16,1	44,5	6000	5,28	(28-56)	-10	70
281DY1LP11000B	12	18,1	46,5	6800	4,56	(4-13,8)	-10	70
281DY2LP11000B	24	18,1	46,5	6800	5,76	(14-27,6)	-10	70
281DY4LP11000B	48	18,1	46,5	6800	6,72	(28-56)	-10	70
281DG1LP11000B	12	19,8	50,5	7500	6,60	(7-13,2)	-10	70

Additional versions:
Lower speeds (refer to page 10)

Non contractual document. Specifications are subject to change without prior notice. Pictures for information only. Edition 2016