Resistance thermometer measuring transducer - MCR-PT100-U-NC - 2810418

Please be informed that the data shown in this PDF Document is generated from our Online Catalog. Please find the complete data in the user's documentation. Our General Terms of Use for Downloads are valid (http://phoenixcontact.com/download)



The illustration shows version MCR-PT100-I-DC

Pt 100 temperature transducer, configurable via DIP switch, selection between 2, 3, 4-conductor technology; input: 0...100 °C, 0...150 °C, 0...200 °C, 0...300 °C, -50...+50 °C, -50...100 °C, -50...150 °C, -50...250 °C, output signal 0...10 V



Key commercial data

Packing unit	1 pc
GTIN	4 017918 118280
Weight per Piece (excluding packing)	139.9 GRM
Custom tariff number	85437090
Country of origin	Germany

Technical data

Note

Utilization restriction	EMC: class A product, see manufacturer's declaration in the download area

Classifications

eCl@ss

eCl@ss 4.0	27200206
eCl@ss 4.1	27200206
eCl@ss 5.0	27200206
eCl@ss 5.1	27200206

Resistance thermometer measuring transducer - MCR-PT100-U-NC - 2810418

Classifications

eCl@ss

eCl@ss 6.0	27200206
eCl@ss 7.0	27200206
eCl@ss 8.0	27200206

ETIM

ETIM 2.0	EC001446
ETIM 3.0	EC001446
ETIM 4.0	EC001446
ETIM 5.0	EC001446

UNSPSC

UNSPSC 6.01	30211506
UNSPSC 7.0901	39121008
UNSPSC 11	39121008
UNSPSC 12.01	39121008
UNSPSC 13.2	39121008

Approvals

Approvals

Approvals

UL Recognized / cUL Recognized / cULus Recognized

Ex Approvals

Approvals submitted

Approval details

UL Recognized

Resistance thermometer measuring transducer - MCR-PT100-U-NC - 2810418

Approvals

cUL Recognized

cULus Recognized

Drawings

Dimensioned drawing

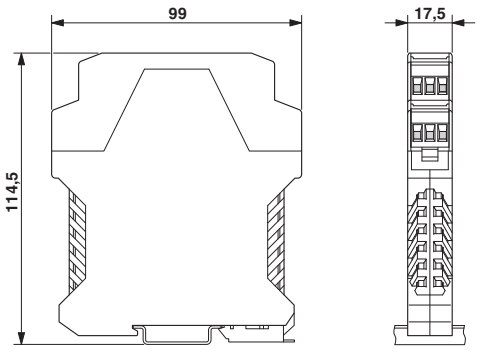

Phoenix Contact 2014 © - all rights reserved
http://www.phoenixcontact.com