MINI MCR-SL-FM-RC-NC

Fault monitoring module



Data sheet
105448_en_00

© PHOENIX CONTACT 2013-01-14

1 Description

Fault monitoring module for evaluating and reporting group errors of the fault monitoring system.

Supply voltages of MINI MCR-SL-PTB-FM(-SP) power terminals can be monitored. Drawing off the supply is also possible. The error is reported via an N/C contact.

Features

- Configurable fault monitoring module
- Configurable via DIP switch
- Approval for Ex-zone 2 (nA)
- Screw or spring-cage connection can be provided

WARNING: Correct usage in potentially explosive areas
The module is a category 3 item of electrical equipment. It is absolutely vital to follow the instructions provided here during installation and observe the information in the "Safety regulations and installation notes".

Make sure you always use the latest documentation.
It can be downloaded from the product at www.phoenixcontact.net/products.

This data sheet is valid for all products listed on the following page:

2 Table of contents

1 Description 1
2 Table of contents 2
3 Ordering data 3
4 Technical data 3
5 Safety regulations and installation notes 5
5.1 Installation notes 5
5.2 Installation in the Ex area (zone 2) 5
6 Installation 6
6.1 Connection notes 6
6.2 Structure 6
6.3 Block diagram 6
6.4 Power supply 6
6.5 Assembly 7
6.6 Connecting the wires 7
7 Fault monitoring FM 8
7.1 Fault monitoring for group error detection 8
7.2 Fault monitoring for redundancy monitoring 8
7.3 Application options 8
8 Configuration 9
9 Diagnostic indicator 9

3 Ordering data

Description	Type	Order No.	Pcs. / Pkt.
The fault monitoring module is used to evaluate and report group errors from the fault monitoring system and to monitor the supply voltages. The error is reported via an N/O contact. Screw connection, standard configuration.	MINI MCR-SL-FM-RC-NC	2902961	1
The fault monitoring module is used to evaluate and report group errors from the fault monitoring system and to monitor the supply voltages. The error is reported via an N/O contact. Spring-cage connection, standard configuration.	MINI MCR-SL-FM-RC-SP-NC	2902962	1

Accessories	Type	Order No.	Pcs. / Pkt.
The MINI MCR-SL-PTB-FM(-SP) power terminal block is used to supply the supply voltage to the T-connector. The FM power terminal block offers the additional function of monitoring in combination with the fault monitoring module. Screw connection.	MINI MCR-SL-PTB-FM	2902958	1
The MINI MCR-SL-PTB-FM(-SP) power terminal block is used to supply the supply voltage to the T-connector. The FM power terminal block offers the additional function of monitoring in combination with the fault monitoring module. Spring-cage connection.	MINI MCR-SL-PTB-FM-SP	2902959	1
DIN rail connector (TBUS), 5-pos., for bridging the supply voltage, can be snapped onto NS 35/... DIN rails according to EN 60715	ME 6,2 TBUS-2 1,5/5-ST-3,81 GN	2869728	10
DIN rail power supply unit, primary-switched mode, slim design, output: 24 V DC / 1.5 A	MINI-SYS-PS-100-240AC/24DC/1.5	2866983	1
Fold up transparent cover for MINI MCR modules with additional labeling option using insert strips and flat Zack marker strip 6.2 mm	MINI MCR DKL	2308111	10
Label for extended marking of MINI MCR modules in connection with the MINI MCR-DKL	MINI MCR-DKL-LABEL	2810272	10

4 Technical data

Input	
Description of the input	Voltage input for redundancy monitoring
Voltage input signal	9.6 V DC ... 30 V DC

Output	
Voltage output signal	9.6 V DC ... 30 V DC
Max. current output signal	2 A
Output description	Switching output
Maximum switching voltage	30 V DC
Max. switching current	50 mA

Supply	
Supply voltage range	9.6 V DC ... 30 V DC (The T connector (ME 6,2 TBUS-2 1,5/5-ST-3,81 GN, Order No. 2869728) can be used to bridge the supply voltage. It can be snapped onto a 35 mm DIN rail according to EN 60715))
Max. current consumption	< 5 mA (at 24 V DC)
Power consumption	< 120 mW (at 24 V DC)

Diagnostic and status indicators	
Status display	Yellow LED (switching output active), red LED (error)

General data	
Maximum temperature coefficient	< 0.01 %/K
Electrical isolation	Basic insulation according to EN 61010
Surge voltage category	II
Degree of protection	IP20
Pollution degree	2
Rated insulation voltage	50 V AC/DC
Dimensions W / H / D	6.2 mm / 93.1 mm / 102.5 mm
Type of housing	PBT green

Connection data	Screw connection	Spring-cage conn.
Conductor cross section, solid	0.2 mm² ... 2.5 mm²	0.2 mm² ... 2.5 mm²
Conductor cross section, stranded	0.2 mm² ... 2.5 mm²	0.2 mm² ... 2.5 mm²
Stripping length	12 mm	8 mm

Ambient conditions	
Ambient temperature (operation)	-20 °C ... 65 °C
Ambient temperature (storage/transport)	-40 °C ... 85 °C

Conformance with EMC Directive 2004/108/EC
Noise immunity according to EN 61000-6-2 When being exposed to interference, there may be minimal deviations.
Noise emission according to EN 61000-6-4

Conformance / approvals	
Conformance	CE-compliant
ATEX	Ⓔx II 3 G Ex nA nC IIC T4 Gc X
UL, USA / Canada	UL 508 Recognized applied for
UL, USA / Canada	Class I, Div. 2, Groups A, B, C, D T5 applied for
Shipbuilding	GL applied for

5 Safety regulations and installation notes

5.1 Installation notes

- The category 3 device is suitable for installation in the zone 2 potentially explosive area. It fulfills the requirements of EN 60079-0:2009 and EN 60079-15:2010.
- Installation, operation, and maintenance may only be carried out by qualified electricians. Follow the installation instructions described. When installing and operating the device, the applicable regulations and safety directives (including national safety directives), as well as general technical regulations, must be observed. The technical data is provided in this package slip and on the certificates (conformity assessment, additional approvals where applicable).
- It is not permissible to open or modify the device. Do not repair the device yourself but replace it with an equivalent device. Repairs may only be carried out by the manufacturer. The manufacturer is not liable for damage resulting from violation.
- The IP20 degree of protection (IEC 60529/EN 60529) of the device is intended for use in a clean and dry environment. Do not subject the device to any load that exceeds the described limits.
- The device is not designed for use in atmospheres with a danger of dust explosions.

5.2 Installation in the Ex area (zone 2)

- Observe the specified conditions for use in potentially explosive areas.
- The device must be installed in a housing (control or distributor box) which meets the requirements of EN 60079-15 and provides at least IP54 (EN 60529) degree of protection.
- During installation and when connecting the supply and signal circuits, observe the requirements of EN 60079-14. Devices may only be connected to circuits in zone 2 if they are suitable for operation in Ex zone 2 and for the prevailing conditions at the place of use.
- In potentially explosive areas, terminals may only be snapped onto or off the DIN rail connector and wires may only be connected or disconnected when the power is switched off.
- The device must be stopped and immediately removed from the Ex area if it is damaged, has been subjected to an impermissible load, has been stored incorrectly, or if it malfunctions.
- You can download the latest documents for these devices from www.phoenixcontact.net/products.

6 Installation

6.1 Connection notes

NOTE: Electrostatic discharge!
The device contains components that can be damaged or destroyed by electrostatic discharge. When handling the device, observe the necessary safety precautions against electrostatic discharge (ESD) according to EN 61340-5-1 and EN 61340-5-2.

6.2 Structure

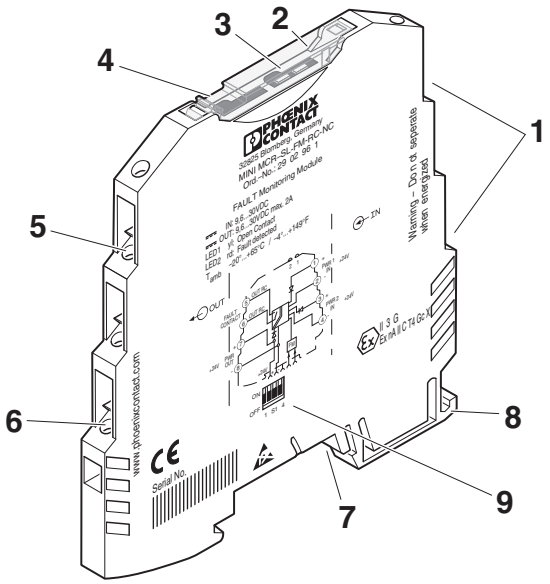

Figure 1 Structure

1. Supply voltage input
2. Cover
3. Diagnostics LED
4. Groove for ZBF 6 zack marker strip
5. Fault monitoring: N/C contact
6. Drawing off a supply voltage
7. Connection for DIN rail connector
8. Universal snap-on foot for EN DIN rails
9. DIP switch S1

6.3 Block diagram

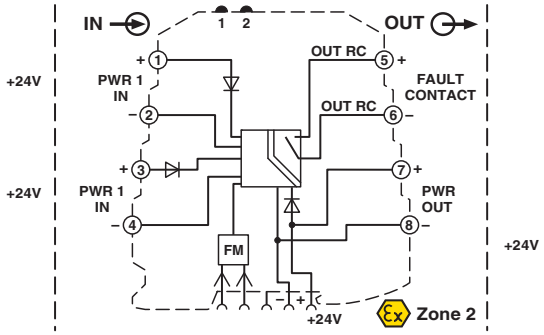

Figure 2 Block diagram

6.4 Power supply

NOTE: Never connect the supply voltage directly to the DIN rail connector. It is not permitted to draw power from the DIN rail connector or from individual modules.

Supply via the MINI Analog Module

Where the total current consumption of the aligned modules does not exceed 400 mA, the power can be supplied directly at the connection terminal blocks of the module.

A 400 mA fuse should be connected upstream.

Supply via a Power Terminal Block

The MINI MCR-SL-PTB-FM power terminal block (Order No. 2902958) or the MINI MCR-SL-PTB-FM-SP power terminal block (Order No. 2902959), which are the same shape, are used to feed the supply voltage to the DIN rail connector.

We recommend connecting a 2.5 A slow-blow fuse (e.g., SIBA 179 120.2,5 20x5).

Supply via a system power supply unit

The system power supply unit with 1.5 A output current connects the DIN rail connector to the supply voltage and can therefore be used to supply several modules from the mains.

– MINI-SYS-PS-100-240AC/24DC/1.5 (Order No. 2866983)
– Potentially explosive areas: MINI-PS-100-240AC/24DC/1.5/EX (Order No. 2866653)

6.5 Assembly

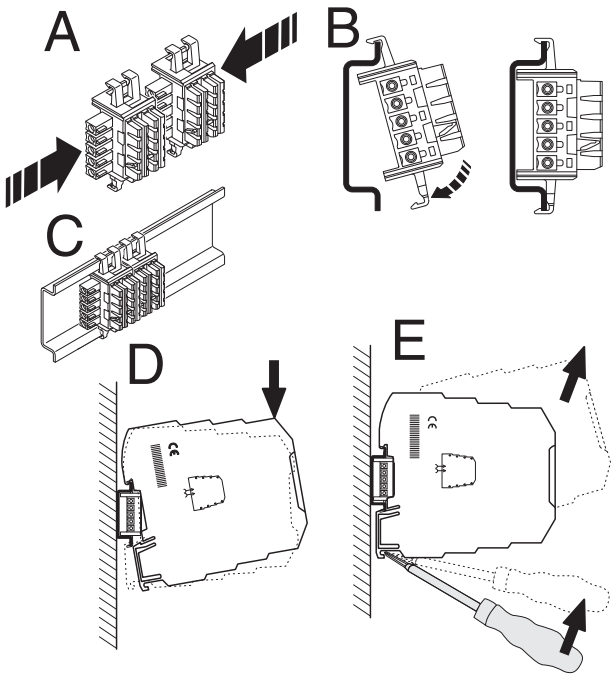

Figure 3 Mounting and removing

– Mount the module on a 35 mm DIN rail according to EN 60715.
– When using the DIN rail connector, first place it into the DIN rail (see A – C). It is used to bridge the power supply. It is also absolutely vital that you snap the module and the DIN rail connector into position in the correct direction: the snap-on foot should be at the bottom and the connector on the left.

6.6 Connecting the wires

The module is available in two connection versions:

– Screw terminal blocks (for MINI MCR-SL-FM-RC-NC)
– Spring-cage terminal blocks (for MINI MCR-SL-FM-RC-SP-NC)

Screw connection:

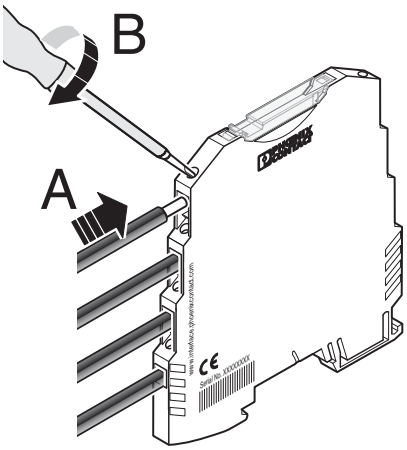

Figure 4 Screw connection

- Insert the wire into the corresponding connection terminal block.
- Use a screwdriver to tighten the screw in the opening above the connection terminal block.

Spring-cage connection:

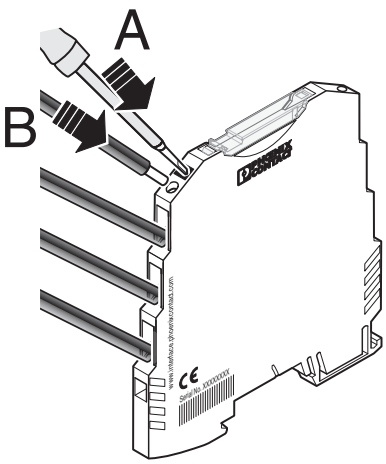

Figure 5 Spring-cage connection

- Insert a screwdriver into the opening above the connection terminal block.
- Insert the wire into the corresponding connection terminal block.

7 Fault monitoring FM

Fault monitoring simplifies error evaluation in multi-channel isolation amplifier applications using a group error message.

7.1 Fault monitoring for group error detection

- Use MINI Analog signal conditioners that support fault monitoring.
- Connect these signal conditioners to the MINI MCR-SL-FM-RC(-SP)-NC fault monitoring module via the DIN rail connector .

Detected errors on the signal input of a MINI Analog isolation amplifier or in the isolation amplifier are reported to the fault monitoring module via the DIN rail connector. The module reports the error centrally via an N/C contact.

7.2 Fault monitoring for redundancy monitoring

With "supply via power terminal", the fault monitoring module can be used to monitor the supply voltage in the group. Failure of the supply voltage generates a central message via an N/C contact.

- Install a power terminal and a fault monitoring module of the same shape side-by-side without spacing.
- Bridge terminals 1 to 4 of the power terminal with terminals 1 to 4 of the fault monitoring module. Use the provided plug-in bridges FB S2-6 (Order No. 3030336) or normal cables.



For additional mechanical redundancy, two power terminals and two fault monitoring modules can be used. Only one supply may be connected to each power terminal. In the second fault monitoring module, fault monitoring of external measuring transducers must be deactivated because evaluation can only take place via a module in a group.

7.3 Application options

– When using a power terminal in combination with a fault monitoring module on the DIN rail connector: Redundant voltage supply on the DIN rail connector is possible, redundancy can be monitored, the group error can be evaluated.
– When using a fault monitoring module without power terminal in the DIN rail connector: Group errors can be monitored only.
– When using a power terminal in combination with a fault monitoring module without DIN rail connector: Redundancy of two supply voltages can be monitored.

8 Configuration

At delivery, all DIP switches are in the "OFF" position.

This corresponds to the following standard configuration:

– Group error detection “on”
– Redundancy monitoring “on”
– Relay “active”

DIP switch S1 is used to activate and deactivate group error detection, redundancy monitoring of the supply voltages, and the relay.

Configure the DIP switches according to the planned application using the configuration tables.



The module can also be configured with the supply voltage not connected.

Configuration table

		• ≙ ON	DIP S1			
			1	2	3	4
Group error detection	ON					
	OFF		•			
Redundancy monitoring	ON					
	OFF			•		
Fault monitoring relay	Active					
	Deacti-vated				•	
No function						

9 Diagnostic indicator

The LEDs indicate the following error states:

– LED red: Fault monitoring system detected an error
– LED yellow: Fault monitoring relay is open