SCALA NON IMPEGNATIVA (DO NOT SCALE)	METRIC	PROIEZIONE EUROPEA (EUROPEAN PROJECTION)
DIMENSIONI IN (DIMENSIONS IN) mm		

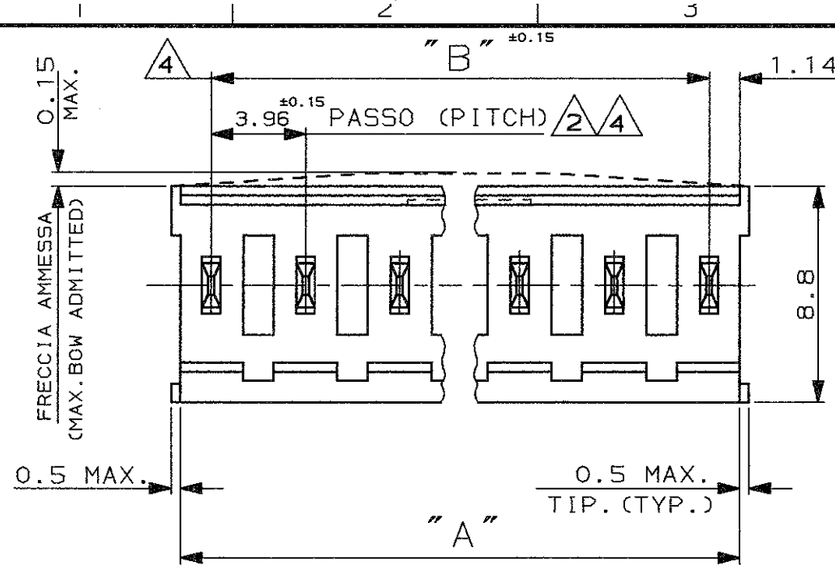

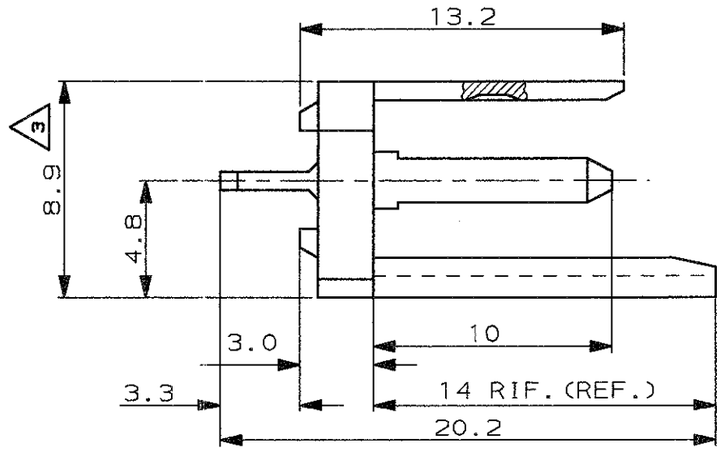

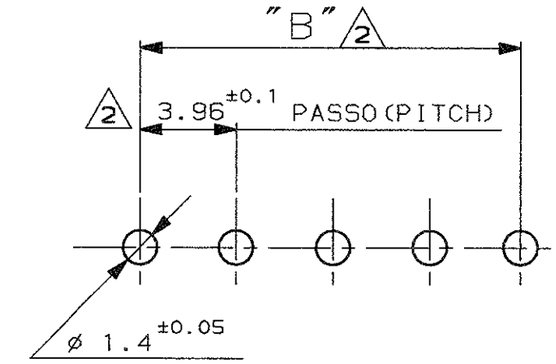

DIMA DI FORATURA SU C.S.
(RECOMMENDED P.C.B. HOLE PATTERN)

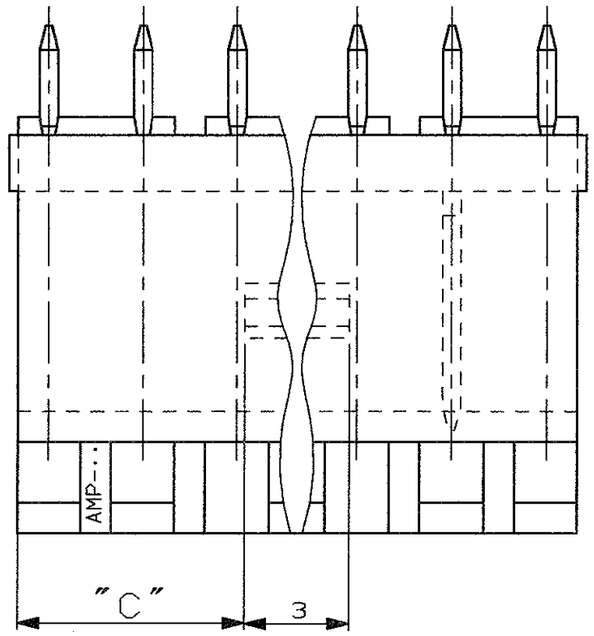

1. OBSOLETO (OBSOLETE)
2. TOLLERANZA NON CUMULATIVA (NOT CUMULATIVE TOLERANCE)
3. ALLA BASE (AT BASE)
4. DIMENSIONE MISURATA ALLA BASE DEI POSTS (POSTS BASE DIMENSION)
5. -
6. MATERIALE CONTATTO: BRONZO PER LA VERSIONE STAGNATA (CONTACT MATERIAL: PH BRONZE FOR TIN PLTD VERSION ONLY)
7. MATERIALE CONTATTO: OTTONE PER LA VERSIONE DORATA (CONTACT MATERIAL: BRASS FOR GOLD PLTD VERSION)
8. MATERIALE BLOCCHETTO: POLICARBONATO CARICATO VETRO, COLORE VERDE (HOUSING MAT'L: POLYCARBONATE GLASS FIBER FILLED, GREEN COLOUR)
9. MATERIALE BLOCCHETTO: POLIESTERE CARICATO VETRO, UL 94-V0, COLORE NERO (HOUSING MAT'L: POLYESTER GLASS FIBER FILLED, UL 94-V0, BLACK COLOUR)

N° POS.	DIM. "A"	DIM. "B"	DIM. "C"	P.N. STAGNATO (TIN PLTD. VERSION)	DORATO 0.37µm AREA CONTATTO, STAGNATO NELLA ZONA A SALDARE (0.37µm GOLD PLTD ON CONTACT AREA, TIN PLTD ON SOLDER TAIL)	DORATO 0.76µm AREA CONTATTO, STAGNATO NELLA ZONA A SALDARE (0.76µm GOLD PLTD ON CONTACT AREA, TIN PLTD ON SOLDER TAIL)	DORATO 1.27µm AREA CONTATTO, STAGNATO NELLA ZONA A SALDARE (1.27µm GOLD PLTD ON CONTACT AREA, TIN PLTD ON SOLDER TAIL)
2	6.2	3.96	1.6	6 9 284678-1	-	-	-
12	45.9	43.59	21.4	8 280614-1	7 8 280614-2	1 7 8 280614-4	1 7 8 280614-3
10	37.9	35.66	17.5	280613-1	280613-2	280613-4	280613-3
8	30.0	27.74	13.5	280612-1	280612-2	280612-4	280612-3
6	22.1	19.81	9.5	280611-1	280611-2	280611-4	280611-3
4	14.2	11.89	5.6	280610-1	280610-2	280610-4	280610-3
2	6.2	3.96	1.6	280609-1	280609-2	280609-4	280609-3

REV.	DESCRIZIONE (REVISION RECORD)	DIS. (DR)
N	REVISED PER ET00-0071-94	C.C. 24-03 '94
M	CANCELLED IA79-5269 15POS. OBSOLETED PN 280614-4, REDRAWN	C.C. 6-91
L	ADDED 0.76µGOLD VERSION	A.B. 6-85
J	ADDED P.C.B. LAYOUT	Z.R. 1-83
H	ADDED FINISH NOTE	A.B. 10-82
G	ADDED IA79-5268 FOR 15 POS.	A.L. 11-79
F	REVISED DIM 14	A.L. 9-79
E	ADDED DASH 3	R.G. 9-78
D	RELEADED FOR DASH 1	P.C. 3-77
C	ADDED DASH 1	M.F. 3-76
B	REVISED	M.F. 3-92
A	RELEASED	V.R 9-75

REV.	REVISIONI (REVISION RECORD)	DIS. (DR)
R	ADDED P/N 284678-1 AND DELETED NOTE 5 "NOT IN PRODUCTION" ET00-0315-00	R.F. 20 Nov 01
P	OBSOLETED P/N 280614-3 ET00-0244-97	F.B. 20 NOV 1997

CUSTOMER DRAWING FOR REFERENCE ONLY

DISEGNO PER CLIENTE SOLO PER RIFERIMENTO

THIS DRAWING IS UNPUBLISHED | RELEASE FOR PUBLICATION 19

© COPYRIGHT 19 BY AMP INCORPORATED, HARRISBURG, PA. ALL INTERNATIONAL RIGHT RESERVED. AMP PRODUCTS MAY BE COVERED BY U.S. AND FOREIGN PATENT AND/OR PATENT PENDING

TOLLERANZE, SE NON DIVERSAMENTE SPECIFICATO (TOLERANCES, UNLESS OTHERWISE SPECIFIED) ± 0.4

ANGOLI (ANGLES) ± 2°

DIAM. ISOLANTE (INS. DIA. RANGE) —

RANGO FILO (WIRE RANGE) —

SCALA (SCALE) —

AMP ITALIA S.p.A.
Corso F.LLI Cervi, 15
COLLEGNO (TORINO)

DIS. (DR.) 27-06-1991 C. CORDOLA

CONT. (CHK.) R. Cantore 6-3-1991

APP. (APP.) _

DESCRIZIONE (DESCRIPTION) AMP-MODU MODI STRAIGHT VERSION POST SUPPORT ASS'Y

LOC.	SIZE	NUMERO (DWG NO)	REV.	FOGLIO (SHEET)
I	A3	C-280609	R	1 DI (OF) 1

DISTRIBUZIONE (PRINT DIST.)