NUMBER C-280233

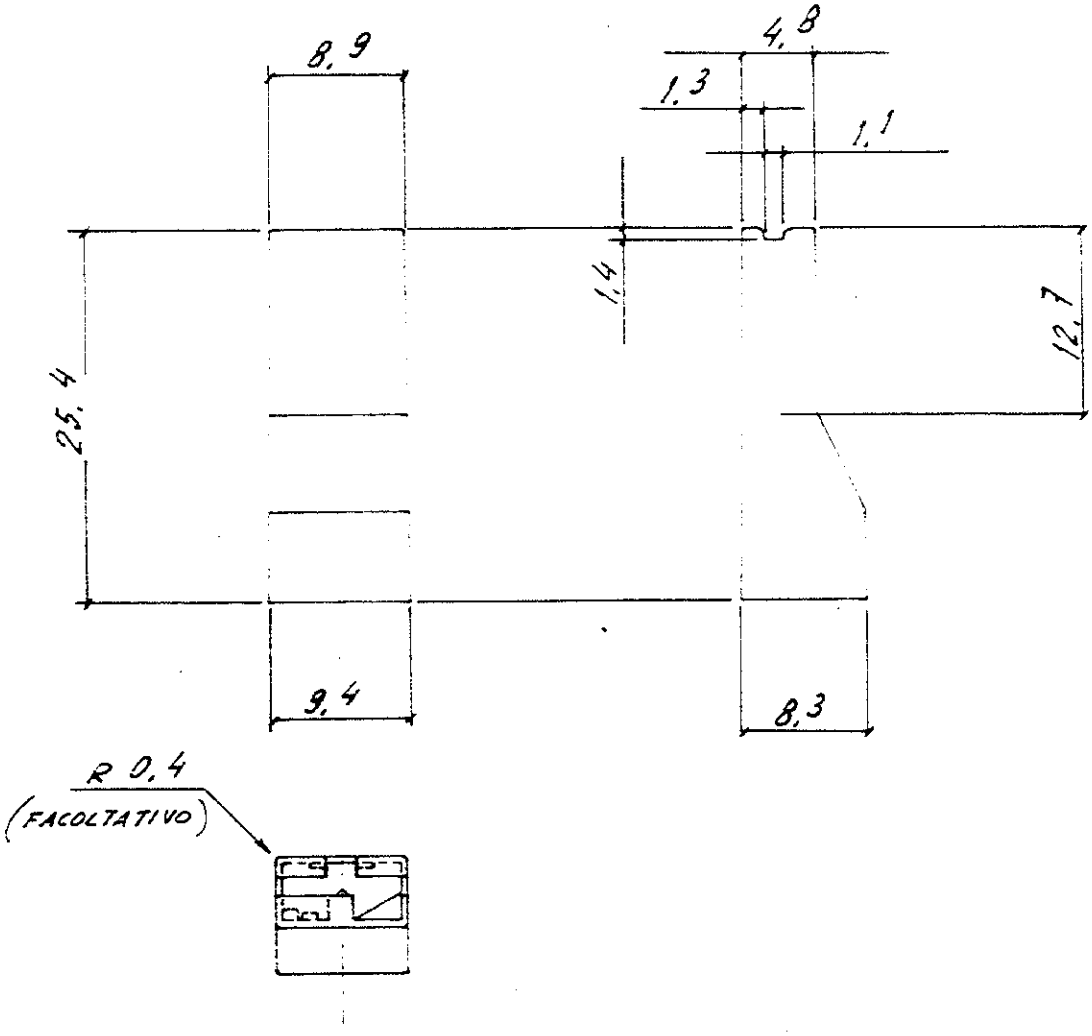

P/N	MATERIALE	COLORE
280233-5	NAILON 6/6	NERO
280233-1		ROSSO
280233-0		NATURALE

DIMENSIONS IN m/m DO NOT SCALE PRINT

LTR	REVISION RECORD	DR	CHK	DATE
D	AGGIUNTO TAB. COLORI	[signature]		6/12/74
C	AGGIORNATO	[signature]	28-3-73	
B	IN PRODUZIONE.	[signature]		MAGGIO 3-72
A	P/N ERA 1A-70-5170.			

© 1971 BY AMP INCORPORATED. ALL RIGHTS RESERVED. AMP PRODUCTS COVERED BY PATENTS AND OR PATENTS PENDING

CUSTOMER COPY REFERENCE ONLY

MATERIAL AND FINISH: VEDERE TABELLA

AMP ITALIA VIA CERVETTO COLLEGNO (TORINO)

CLASS: (4 ÷ 6 m/m²)

WIRE RANGE INSULATION

TYPE

TOLERANCE EXCEPT AS NOTED ± 0,4 ± 1°

SCALE 2:1 | LOC 1 | A | NO C-280233 | REV

DR [signature] 24 SETT. 71 | DE

CHK [signature] 4-5-73 | APP

NAME: POST INSULATION FOR FASTON. 250 SERIES.

PRINT DIST

AMP 1:52