Head-mounted Two-wire Signal Conditioners
27-UNIT

2-WIRE UNIVERSAL TEMPERATURE TRANSMITTER
(HART communication)

Functions & Features
- Universal input: DC mV, T/C, RTD and resistance
- High accuracy
- HART communication
- Intrinsically safe approval
- Suitable for Functional Safety applications up to SIL2
- Programming via hand-held communicator or via PC
- A wide variety of T/C and RTD types
- User's temperature table can be used
- Self diagnostics
- Ultra-low temp. drift option (20 ppm/°C typ.)
- CE marking (conforms to ATEX and EMC)

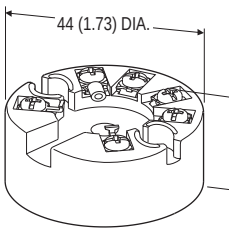

FM APPROVED

MODEL: 27HU–[1][2]

ORDERING INFORMATION
- Code number: 27HU-[1][2]

Specify a code from below for each of [1] and [2].
(e.g. 27HU-2/L)
Use Ordering Information Sheet (No. ESU-7651). Factory standard setting will be used if not otherwise specified.
Specify the country in which the product is to be used with the Safety Approval code 2.

[1] SAFETY APPROVAL
0: None
1: FM intrinsically safe
2: ATEX intrinsic safety

[2] OPTIONS
Temperature Drift
Blank: Standard (temp. coefficient 0.015%/°C)
/L: Ultra-low temperature drift
(temp. coefficient 0.002%/°C typ., 0.005%/°C max.)

RELATED PRODUCTS
- USB interface Bell202 modem (model: COP-HU)

Usable in 'non-hazardous' area only.
- Hand-held communicator
- PC configurator software (model: 27HUCFG)

Downloadable at M-System's web site.

GENERAL SPECIFICATIONS
Construction: Sensor head-mounting
Connection: M3 screw terminals (torque 0.5 N·m)
Screw terminal: Nickel-plated brass
Housing material: Flame-resistant resin (black)
Isolation: Input to output
User-configurable items:
- Input sensor type and numbers
- Number of wires (RTD & resistance)
- Input range (inverted range selectable)
- Burnout
- Output limits (Upper / Lower)
- Damping time (factory set to 0)
- Cold junction compensation (T/C; internal or external sensor selectable)
- Linearization
- Sensor calibration
- Output calibration
- HART communication mode

Refer to the HART setup manual or the PC configurator users manual for the detail.

HART COMMUNICATION
Protocol: HART communication protocol
HART address range: 0 – 15 (factory set to 0)
Transmission speed: 1200 bps
Digital current: Approx. 1 mAp-p when communicating
Character format: 1 Start Bit, 8 Data Bits, 1 Odd Parity Bit, 1 Stop Bit
Distance: 1.5 km (0.9 miles)
HART communication mode: Master-Slave Mode and Burst Mode (factory set to Master-Slave)
HART network mode: Point-to-Point Mode and Multi-drop Mode; automatically set to Multi-drop Mode when the address is set to other than 0.

INPUT SPECIFICATIONS
The input is factory set for use with K thermocouple, single input, 0 to 100°C, internal CJC sensor.
See Table 1 for the available input type, the minimum span and the maximum range.

■ **DC mV (dual input available)**
Input resistance: ≥ 1 MΩ

■ **Thermocouple (dual input available)**

Input resistance: ≥ 1 MΩ
Burnout sensing: 33 µA
External CJC sensor type: Pt 100
■ **RTD (2-wire, 3-wire or 4-wire)**
Input resistance: ≥ 1 MΩ
Excitation: 0.2 mA
Allowable leadwire resistance: Max. 10 Ω per wire
■ **Resistance (2-wire, 3-wire or 4-wire)**
Input resistance: ≥ 1 MΩ
Excitation: 0.2 mA
Allowable leadwire resistance: Max. 10 Ω per wire

OUTPUT SPECIFICATIONS

Output range: 4 – 20 mA DC
Operational range: 3.75 – 23 mA
Load resistance vs. supply voltage:
Load Resistance (Ω) = (Supply Voltage (V) – 8 (V))
÷ 0.023 (A) (including leadwire resistance)
Burnout: 3.75 – 3.8 mA or 21.5 – 23 mA
(factory set to 23 mA)
Upper output limit proportional to the input:
20 – 21.5 mA (factory set to 21.5 mA)
Lower output limit proportional to the input:
3.8 – 4 mA (factory set to 3.8 mA)
Update time: 440 msec. (660 msec. with dual input)
Output characteristics for dual input:
Average or Differential selectable

INSTALLATION

Supply voltage
- 8 – 35 V DC (non-approved)
- 8 – 28 V DC (approved)

Operating temperature: -40 to +85°C (-40 to +185°F)
(See Safety Parameters for use in a hazardous location.)
Operating humidity: 0 to 95 %RH (non-condensing)
Mounting: Head-mounting (DIN type B head)
Weight: 50 g (1.76 oz)

PERFORMANCE

Accuracy: See Table 1.
Cold junction compensation accuracy: ±0.5°C (±0.9°F) with internal CJC sensor
Response time: ≤ 2 sec. (0 – 90 %) with damping time set to 0 and when not communicating via HART.
Supply voltage effect: ±0.005 % of span/V
Insulation resistance: ≥ 100 MΩ with 500 V DC
Dielectric strength: 1500 V AC @1 minute (input to output)
Safety integrity level according to IEC 61508: Suitable for use in a safety instrumented system up to SIL2 (together with sensor) if appropriate safety instructions are observed. Consult M-System.

STANDARDS & APPROVALS

EU conformity:
ATEX Directive
Ex ia EN 60079-11
EMC Directive
EN 61326-1
RoHS Directive
EN 50581
Safety approval:
FM: Intrinsically safe
Class I, Division 1, Groups A, B, C and D
Class I, Zone 0, AEx ia IIC (US)
Class I, Zone 0, Ex ia IIC (Canada)
T4, T5 and T6
(Class 3610, ANSI/ISA 60079-11,
CAN/CSA-C22.2 No. 157,
CAN/CSA-C22.2 No. 60079-11)
ATEX: Intrinsic safety
⟨Ex⟩ II 1G, Ex ia IIC; T4, T5 and T6
(EN 60079-0)
(EN 60079-11)

SAFETY PARAMETERS

Operating temperature
For ATEX / FM:
T4: -40 to +80°C
T5: -40 to +60°C
T6: -40 to +45°C
Ex-data:
• Output circuit
Ui (Vmax): 30 V DC
Ii (Imax): 96 mA DC
Pi (Pmax): 720 mW
Ci: 1 nF
Li: 0 mH
• Sensor circuit
Uo (Voc): 30 V DC
Io (Isc): 24 mA DC
Po: 180 mW
Co (Ca): 50 nF
Lo (La): 40 mH

INPUT TYPE, RANGE & ACCURACY

INPUT TYPE	MINIMUM SAPN	MAXIMUM SPAN	ACCURACY *1	TEMPERATURE DRIFT	
				STANDARD DRIFT *2	ULTRA-LOW DRIFT *3
DC mV	4 mV	-100 to +800 mV	±10 µV	±1.5 µV/°C	±0.5 µV/°C
Resistance	25 Ω	0 to 4 kΩ	±0.1 Ω	±15 mΩ /°C	±5 mΩ /°C

Thermocouple	°C			°F			TEMPERATURE DRIFT	
	MINIMUM SAPN	MAXIMUM RENGE	ACCURACY *1	MINIMUM SAPN	MAXIMUM RENGE	ACCURACY *1	STANDARD DRIFT *2	ULTRA-LOW DRIFT *3
K (CA)	50	-180 to +1372	±0.5	90	-292 to +2501	±0.9	±0.075°C/°C	±0.025°C/°C
E (CRC)	50	-100 to +1000	±0.5	90	-148 to +1832	±0.9	±0.075°C/°C	±0.025°C/°C
J (IC)	50	-100 to +1200	±0.5	90	-148 to +2192	±0.9	±0.075°C/°C	±0.025°C/°C
T (CC)	50	-200 to +400	±0.5	90	-328 to +752	±0.9	±0.075°C/°C	±0.025°C/°C
B (RH)	100	400 to 1820	±1	180	752 to 3308	±1.8	±0.3°C/°C	±0.1°C/°C
R	100	-50 to +1760*4	±1	180	-58 to +3200*4	±1.8	±0.3°C/°C	±0.1°C/°C
S	100	-50 to +1760*4	±1	180	-58 to +3200*4	±1.8	±0.3°C/°C	±0.1°C/°C
C (WRe 5-26)	100	0 to 2300	±1	180	32 to 4172	±1.8	±0.3°C/°C	±0.1°C/°C
D (WRe 3-25)	100	0 to 2300	±1	180	32 to 4172	±1.8	±0.3°C/°C	±0.1°C/°C
N	50	-180 to +1300	±0.5	90	-292 to +2372	±0.9	±0.075°C/°C	±0.025°C/°C
U	50	-200 to +600	±0.5	90	-328 to +1112	±0.9	±0.075°C/°C	±0.025°C/°C
L	50	-100 to +900	±0.5	90	-148 to +1652	±0.9	±0.075°C/°C	±0.025°C/°C

RTD	°C			°F			TEMPERATURE DRIFT	
	MINIMUM SAPN	MAXIMUM RENGE	ACCURACY *1	MINIMUM SAPN	MAXIMUM RENGE	ACCURACY *1	STANDARD DRIFT *2	ULTRA-LOW DRIFT *3
Pt 100 (JIS '97, IEC)	10	-200 to +850	±0.1	18	-328 to +1562	±0.18	±0.015°C/°C	±0.005°C/°C
Pt 200	10	-200 to +850	±0.1	18	-328 to +1562	±0.18	±0.015°C/°C	±0.005°C/°C
Pt 500	10	-200 to +850	±0.1	18	-328 to +1562	±0.18	±0.015°C/°C	±0.005°C/°C
Pt 1000	10	-200 to +850	±0.1	18	-328 to +1562	±0.18	±0.015°C/°C	±0.005°C/°C
JPt 100 (JIS '89)	10	-200 to +510	±0.1	18	-328 to +950	±0.18	±0.015°C/°C	±0.005°C/°C
Ni 100 (DIN 43760 '87)	10	-60 to +250	±0.2	18	-76 to +482	±0.36	±0.015°C/°C	±0.005°C/°C

*1. DC mV: Or ±0.05 % of absolute range (greater of 0 % and 100 % range values), whichever is greater.
Or ±0.2 % of absolute negative range for two inputs including negative ranges, whichever is greater.
Resistance: Or ±0.05 % of absolute range (greater of 0 % and 100 % range values), whichever is greater.
Thermocouple: Or ±0.05 % of span, whichever is greater. Add cold junction compensation error.
RTD: Or ±0.05 % of max. range (greater of 0 % and 100 % range values converted into °C), whichever is greater.
(For 2- or 3-wire RTD, the value is valid by the sensor calibration after wiring is complete.)
*2. Or ±0.015 % of absolute range/°C (greater of 0 % and 100 % range values), whichever is greater.
*3. Or ±0.005 % of absolute range/°C (greater of 0 % and 100 % range values), whichever is greater.
*4. Conformance range: 50 to 1760°C or 122 to 3200°F

EXTERNAL DIMENSIONS & TERMINAL ASSIGNMENTS unit: mm (inch)

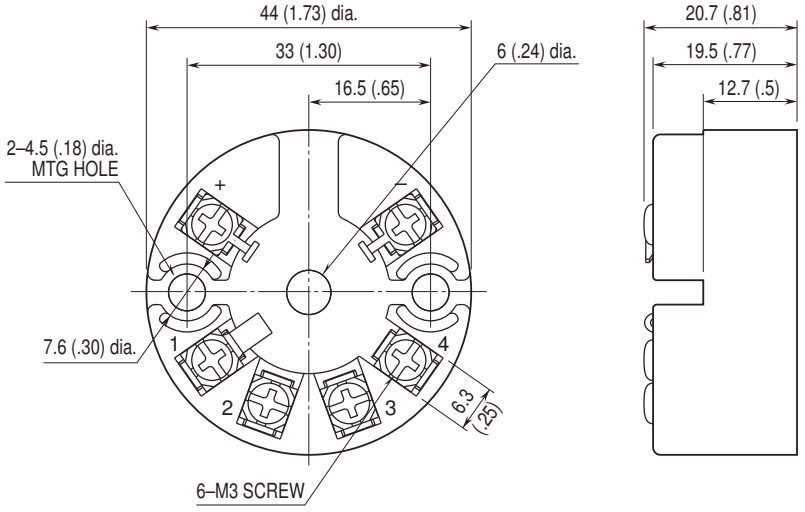

MOUNTING REQUIREMENTS unit: mm (inch)

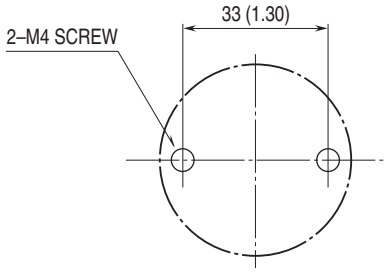

The screws are to be provided by the customer.

SCHEMATIC CIRCUITRY & CONNECTION DIAGRAM

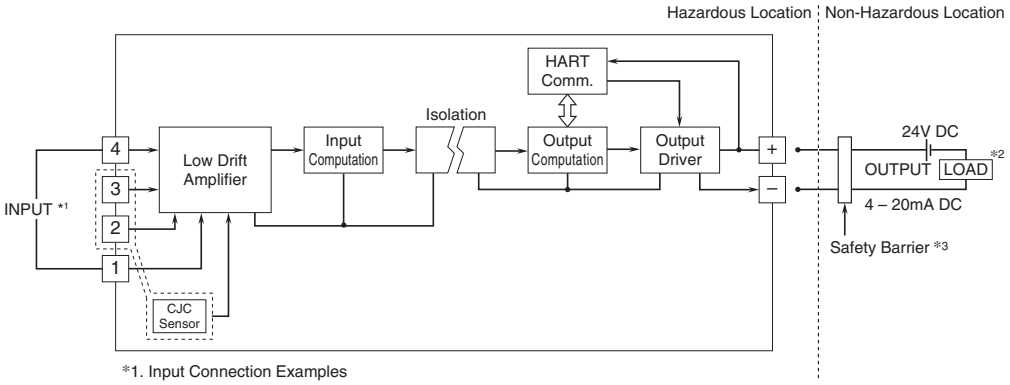

*1. Input Connection Examples

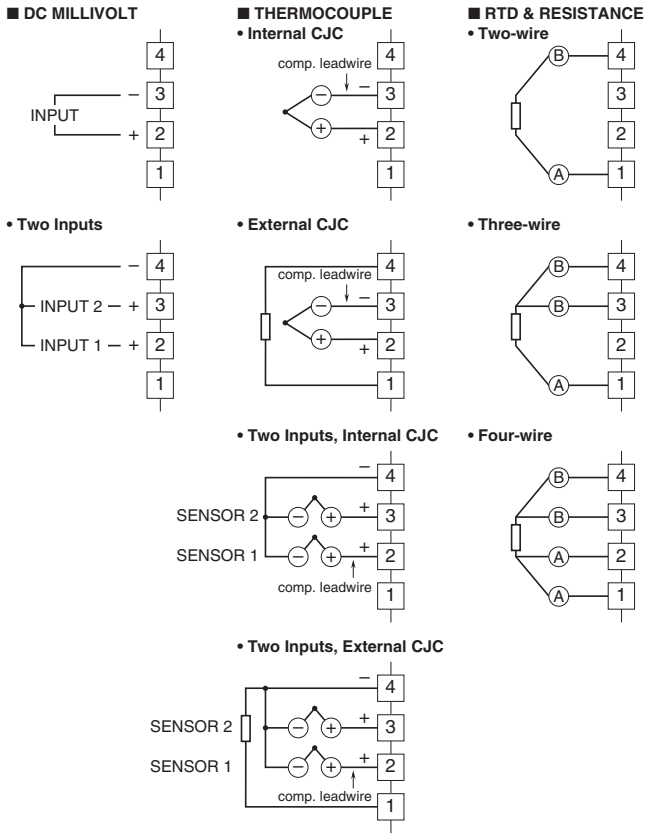

*2. Limited to 250 – 1100Ω for HART communication.
*3. A safety barrier must be installed for the intrinsic safety.
The safety barrier must meet the Ex-data of this unit and must be approved for the hazardous location.

⚠ Specifications are subject to change without notice.