1,574” x 1,574” x 0,393” 40 x 40 x 10 mm

Series 276D

ETRI®

DC Axial Fans

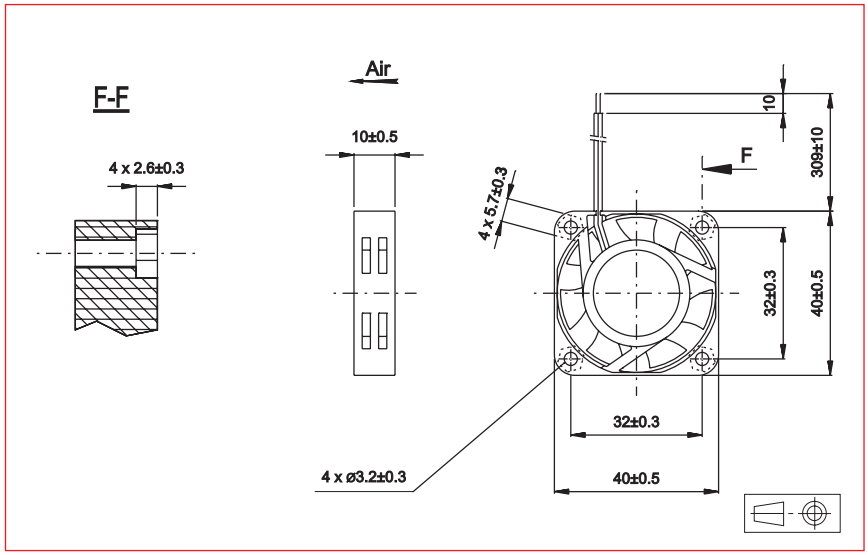



Approvals

CE UL

Brushless DC Motor
Electrical protection: integrated circuit
Housing material: plastic UL 94 V0
Impeller material: plastic UL 94 V0
Maximun weight: 20 g
Bearing system: ball bearings
Connection: flying leads
IP 20

Available with:
- Speed sensor
- Alarm
- IP 54 / IP 55

Life expectancy

L-10 LIFE AT 40°C :
70 000 hours

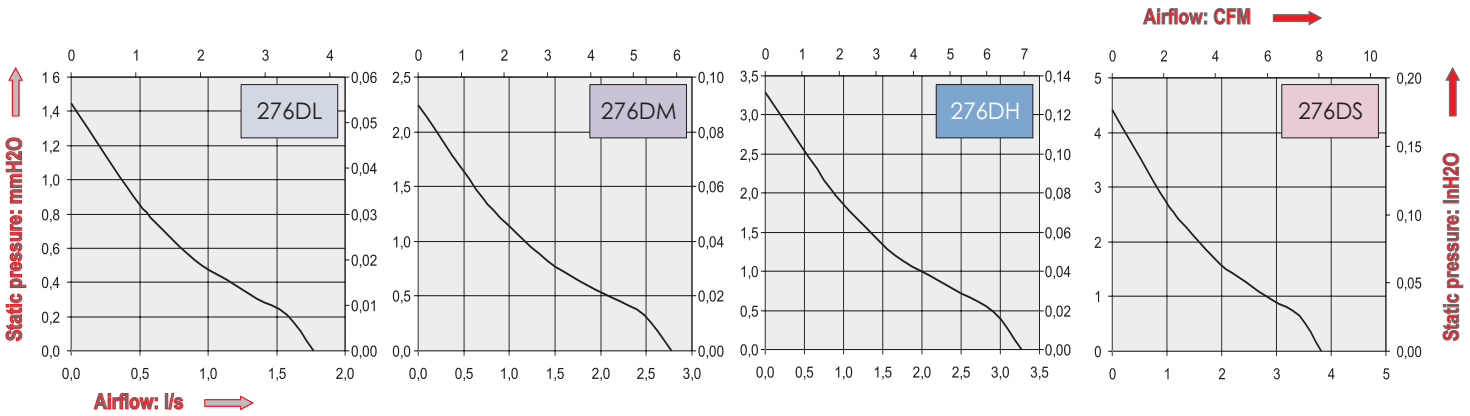

Part Number	Nominal voltage	Airflow	Noise level	Nominal speed	Input Power	Voltage range	Operating temperature	
	V	l/s	dB(A)	RPM	W	V	Min.°C	Max.°C
276DL5LP11000C	5	1,8	20,5	4000	0,4	(4,5-5,5)	-10	70
276DL1LP11000C	12	1,8	20,5	4000	0,6	(9-13,8)	-10	70
276DM5LP11000C	5	2,8	24,5	5000	0,5	(4,5-5,5)	-10	70
276DM1LP11000C	12	2,8	24,5	5000	0,7	(7-13,8)	-10	70
276DH5LP11000C	5	3,3	28,5	6000	0,7	(4,5-5,5)	-10	70
276DH1LP11000C	12	3,3	28,5	6000	1,0	(7-13,8)	-10	70
276DS5LP11000C	5	3,8	33,0	7000	1,0	(4,5-5,5)	-10	70
276DS1LP11000C	12	3,8	33,0	7000	1,2	(7-13,8)	-10	70

Additional versions:
Higher speed (276DX): consult factory

Non contractual document. Specifications are subject to change without prior notice. Pictures for information only. Edition 2016