KR Electronics

General Description

KR 2760 is a 65 MHz surface mount bandpass filter. Other center frequencies and bandwidths available. Please consult the factory.

Features

- 65 MHz Center Frequency
- 1 dB Bandwidth, 10 MHz min
- Surface Mount Package
- 50 Ω Source and Load

Typical Performance

Passband Amplitude & Group Delay

(1 dB/div and 5 nsec/div)

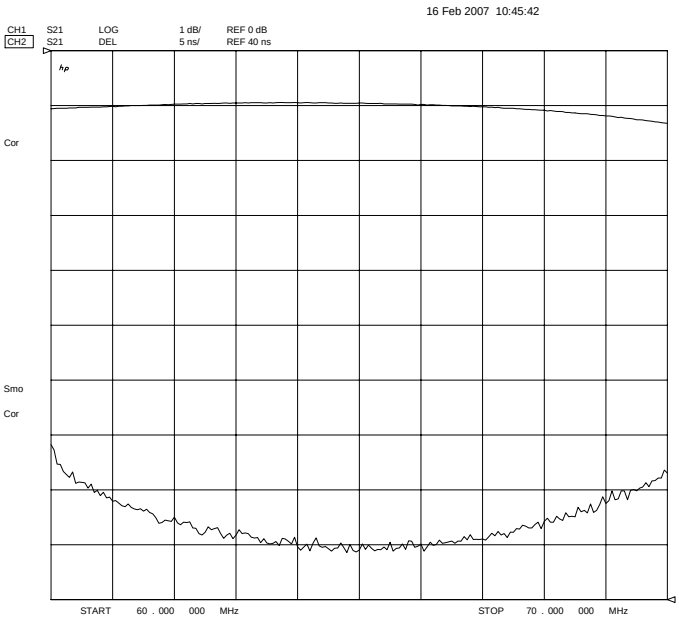

Overall Response

(10 dB/div)

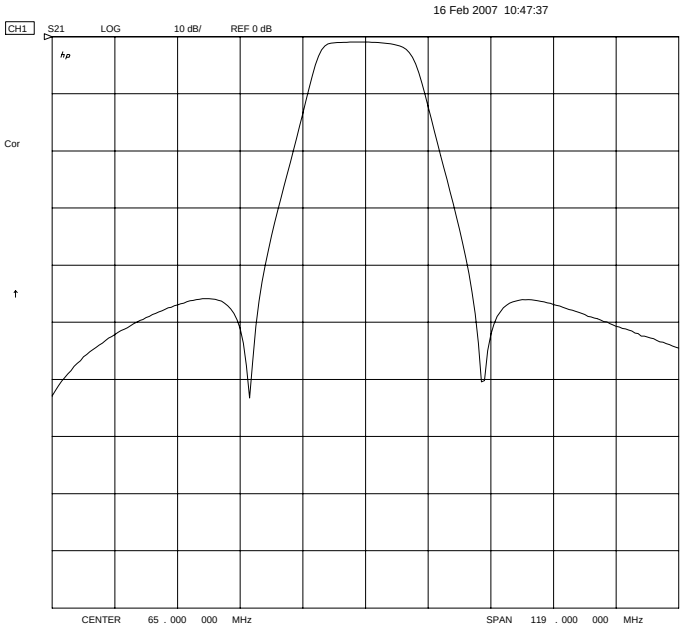

KR Electronics, Inc.
91 Avenel Street
Avenel, NJ 07001

Web *www.krfilters.com*
Email *sales@krfilters.com*
Phone *(732) 636-1900*
Fax *(732) 636-1982*

© 2007, KR Electronics, Inc.

KR Electronics 2760 Bandpass

Specifications

Parameter	Specification	Typical
Filter type	Bandpass	
Center Frequency	65 MHz	
Insertion Loss	< 2 dB	1 dB
1 dB Bandwidth	10 MHz min	15 MHz
Attenuation at 60 MHz	> 40 dB	
Attenuation at 70 MHz	> 40 dB	
Source and Load	50 Ω	

Physical Dimensions

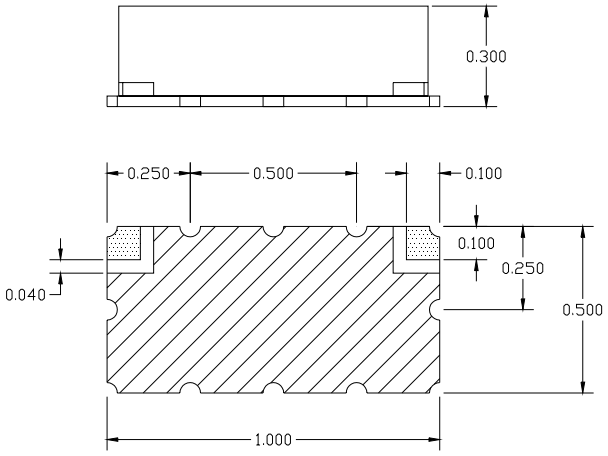



Notes:
1. Surface mount package — Metal cover (can also be supplied in an package with SMA Connectors)
2. Dimensions in inches
3. Maximum reflow temperature is 209° C for 15 sec maximum.
4. If boards are cleaned after installation, dry units completely.

KR Electronics, Inc.
91 Avenel Street
Avenel, NJ 07001

Web *www.krfilters.com*
Email *sales@krfilters.com*
Phone *(732) 636-1900*
Fax *(732) 636-1982*

© 2007, KR Electronics, Inc.