NOTES:

1. SCREW AND WASHER TO BE SHIPPED UNASSEMBLED IN A SEPARATE BAG.
2. ALL TORQUE TESTING MUST BE PERFORMED WITH A .038 / 0.97 MINIMUM THICK SPACER BETWEEN THE SCREW HEAD AND TERMINAL BODY.
3. TORQUE REQUIREMENTS: THE THREADS OF BOTH THE POWER TERMINAL AND THE BRASS SCREW SUPPLIED WILL WITHSTAND 8 IN.-LBS. MINIMUM OF TIGHTENING TORQUE WITHOUT DAMAGE, WHEN A WASHER WITH A MINIMUM THICKNESS OF .038 / 0.97 (AS SUPPLIED) IS INSTALLED BETWEEN THE SCREW HEAD AND THE POWER TERMINAL BODY.
4. NO PLATING ON EDGES SHOWN.
5. C-Press® CONTACT PLATED THRU HOLE REQUIREMENTS PER DRAWING 27331.
6. WHEN NO WASHER / SPACER OR TERMINAL LUG IS INSTALLED, THE THREADS OF THE POWER TERMINAL WILL WITHSTAND A MAXIMUM TIGHTENING TORQUE OF 6 IN.-LBS.

REV	DESCRIPTION	BY DATE	APPD
J	REVISED PER ECR8697	CWB 10/07/05	V.B.H.

SPECIFICATIONS

MATERIALS

Insulator	Nylon, UL 94V-0 Rated, Color: Natural
Power Terminal	Copper-Nickel-Tin Alloy, CDA 72500 Finish: SEE CHART except per note 4
1 2 3 Screw (Not Shown)	Brass (SEE CHART)
1 2 3 Washer (Not Shown)	Brass (SEE CHART)

PERFORMANCE CHARACTERISTICS

Insulation resistance	5000 megohms min.
Current rating, 6 Pin	18 amp. @ 30°C rise
Operating temperature range	-55°C to +105°C
C-Press® Performance:	
• Maximum insertion force, 6 Pin	240 lbs. max.
• Minimum retention force, 6 Pin	48 lbs. min.
• Number of repair cycles without hole deformation or performance loss	3
• Contact to PTH electrical resistance	2 milliohms max.

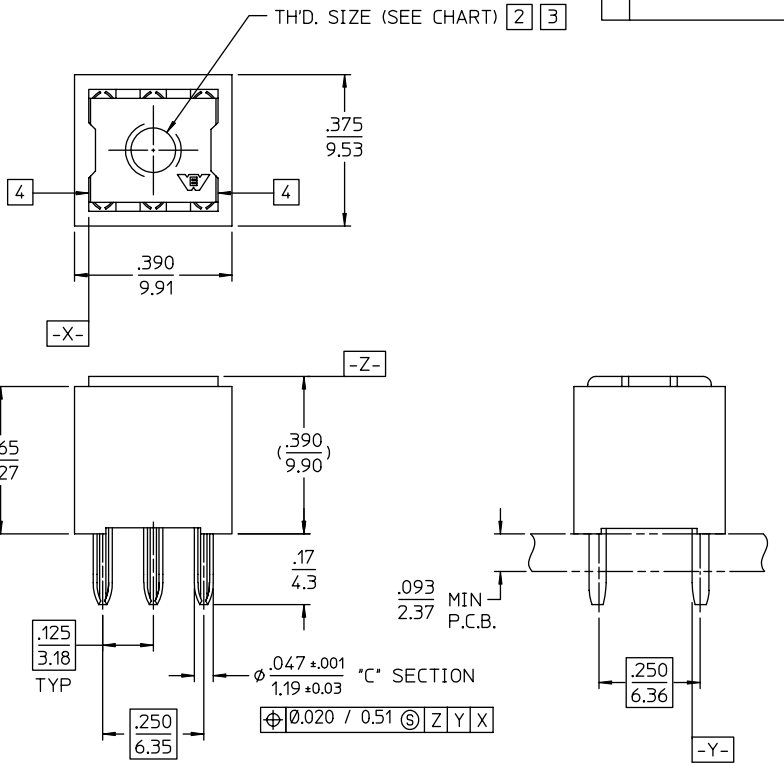

121-27296-2 SHOWN

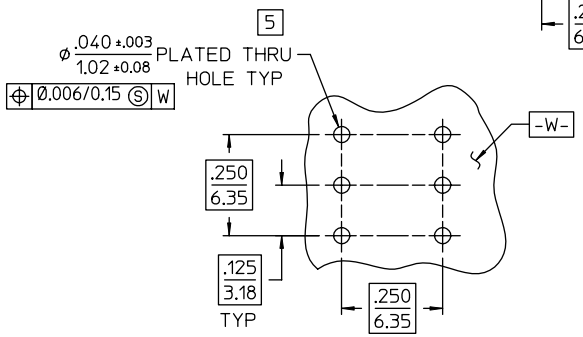

P.C. BOARD HOLE PATTERN

CATALOG Nº	DESCRIPTION	INSERTION TOOL	REMOVAL TOOL	PLATING
121-27296-04-260	#6-32 UNC-2B THREAD, WITH #6-32 UNC-2A SCREW AND .22 / 5.6 O.D. X .038 / 0.97 MIN. THK. WASHER	107-42677	107-42503	PURE TIN (RoHS)
1 2 3 121-27296-4			107-42503	TIN LEAD
1 2 3 121-27296-3	#4-40 UNC-2B THREAD, WITH #4-40 UNC-2A SCREW AND .19 / 4.8 O.D. X .038 / 0.97 MIN. THK. WASHER		107-42678	TIN LEAD
121-27296-2	#6-32 UNC-2B THREAD, WITHOUT SCREW		107-42503	TIN LEAD
121-27296-1	#4-40 UNC-2B THREAD, WITHOUT SCREW		107-42678	TIN LEAD

121 SERIES

PER ASME Y14.5M-1994
UNLESS OTHERWISE SPECIFIED:
DIMENSIONS ARE IN INCHES OR INCHES/MM
MM
TOLERANCES:
DECIMALS: .XX ± .01 / 0.3
.XXX ± .005 / 0.13
ANGLES: ± SCALE:4:1

NORTHROP GRUMMAN

Winchester Electronics
62 Barnes Industrial Road North
Wallingford, CT 06492

CUSTOMER DRAWING

TITLE
POWER TERMINAL WITH INSULATOR
.125 X .250 GRID - 6 PIN

DRAWN	DATE	APPROVED	DATE
DONNA	07/16/85	JAD	08/09/85
APPROVED	DATE	APPROVED	DATE
JAD	08/12/85		

C | 27296 | SHT. 1 OF 1 | REV. J

June 2006 - This drawing became the property of Winchester Electronics Corporation, Wallingford, CT.