Connector - SACC-MR-5SC SH SCO - 1432651

Please be informed that the data shown in this PDF Document is generated from our Online Catalog. Please find the complete data in the user's documentation. Our General Terms of Use for Downloads are valid (http://phoenixcontact.com/download)

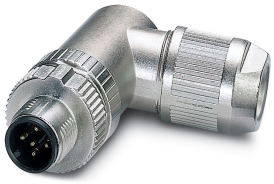

Connector, 5-position, shielded, Plug angled M12 SPEEDCON, Coding: A, Spring-cage connection, knurl material: Zinc die-cast, nickel-plated, external cable diameter 4 mm ... 8 mm

Your advantages

- Safe use in the field, thanks to a high degree of protection
- Flexible: connectors for on-site assembly
- Save time, thanks to installation with SPEEDCON fast locking system
- Spring-cage connection: connect more securely, even in the case of shock and vibration, thanks to high contact forces
- Reliable signal transmission - 360° shielding in environments with electromagnetic interference

Key Commercial Data

Packing unit	1 pc
GTIN	4 046356 348348
GTIN	4046356348348

Technical data

Dimensions

External cable diameter	4 mm ... 8 mm
Stripping length of the sheath	35 mm
Stripping length of the individual wire	10 mm

Ambient conditions

Ambient temperature (operation)	-40 °C ... 85 °C (Plug / socket)
	-40 °C ... 85 °C (Plug / socket)
Degree of protection	IP65
	IP67

General

Rated current at 40°C	4 A

Connector - SACC-MR-5SC SH SCO - 1432651

Technical data

General

Rated voltage	60 V DC
	48 V AC
Number of positions	5
Insulation resistance	≥ 100 MΩ
Coding	A - standard
Standards/regulations	M12 connector IEC 61076-2-101
	Shock, vibration EN 50155:2001
Status display	No
Overvoltage category	II
Degree of pollution	3
Connection method	Spring-cage connection
Conductor cross section	0.14 mm² ... 0.5 mm²
Conductor cross section AWG	26 ... 20
Insertion/withdrawal cycles	≥ 100
Torque	0.4 Nm (M12 knurl)
	0.8 Nm (Connector with coupling sleeve)
	3 Nm (Pressure nut with coupling sleeve)
Assembly instructions	AWG 18 wire cross section upon request
	The connector pin assignment can be rotated 45° to the cable outlet
	The wires can be connected both with ferrules and without ferrules

Material

Flammability rating according to UL 94	V0
Contact material	CuSn
Contact surface material	Ni/Au
Contact carrier material	TPU
Material of grip body	Zinc die-cast, nickel-plated
Material, knurls	Zinc die-cast, nickel-plated
Sealing material	NBR

Standards and Regulations

Standards/specifications	M12 connector IEC 61076-2-101
	Shock, vibration EN 50155:2001
Connection in acc. with standard	CUL
Flammability rating according to UL 94	V0

Environmental Product Compliance

China RoHS	Environmentally friendly use period: unlimited = EFUP-e
	No hazardous substances above threshold values

Drawings

Connector - SACC-MR-5SC SH SCO - 1432651

Schematic diagram

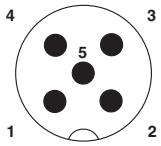

Pin assignment M12 male connector, 5-pos., A-coded, male side

Functional drawing

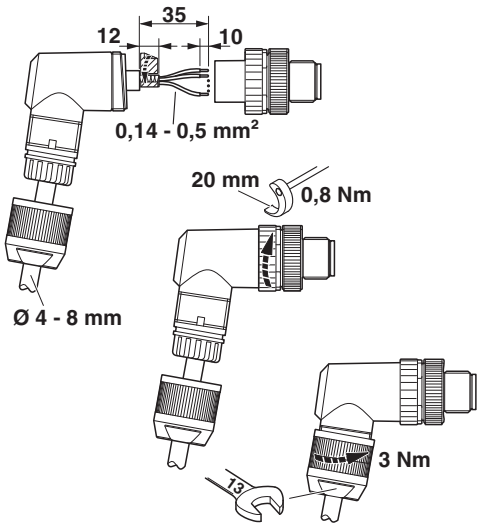

Slide the pressure nut and sleeve housing along the cable, strip the cable, shorten the shield, strip the single wires, connect the wires, in the case of a straight sleeve housing gently twist the wires together, stick the shielding foil around the shortened shield, in the case of a cable outside diameter < 6 mm stick an additional shielding foil around the wire pack, screw the sleeve housing to the plug insert, screw the pressure nut tight.

Dimensional drawing

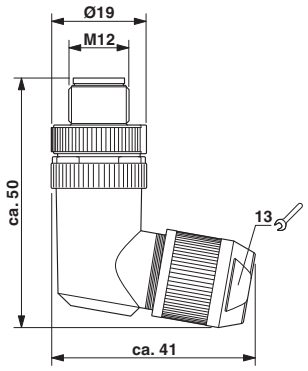

Plug M12 SPEEDCON, angled, shielded

Classifications

eCl@ss

eCl@ss 4.0	27250313
eCl@ss 4.1	27250313
eCl@ss 5.0	27143423
eCl@ss 5.1	27143400
eCl@ss 6.0	27279200
eCl@ss 7.0	27440104
eCl@ss 9.0	27440102

Connector - SACC-MR-5SC SH SCO - 1432651

Classifications

ETIM

ETIM 3.0	EC001855
ETIM 4.0	EC002062
ETIM 6.0	EC002062

UNSPSC

UNSPSC 6.01	31251501
UNSPSC 7.0901	31251501
UNSPSC 11	31251501
UNSPSC 12.01	31251501
UNSPSC 13.2	39121413
UNSPSC 19.0	39121413

Accessories

Accessories

Cable by the meter

Cable reel - SAC-5P-100,0-PUR/SH-0,34 - 1501728



By the meter, Cable reel, shielded, PUR halogen-free, black-gray RAL 7021, 5-wire, color single wire: Brown, white, blue, black, gray, cable length: 100 m

Protective cap

Sealing cap - PROT-M12 FS-PA-CHAIN - 1430873

M12 sealing cap made of plastic with fixing band, for sensor cables, for free M12 plugs



Screwdriver tools

Tool - SACC BIT M12-D20 - 1208445



Nut for assembling M12 connectors for assembly with a knurl diameter of 20 mm, for 4 mm hexagonal drive

Connector - SACC-MR-5SC SH SCO - 1432651

Accessories

Adapter insert - TSD-M SAC-BIT ADAPTER - 1212600



Adapter bit for TSD-M...torque tools, E6.3-1/4" drive with 4 mm hexagon to accommodate SAC bits

---

Shield connection

Shielding foil - ALU-SB - 1404531

Shielding foil, for fixing the braided shield of shielded cables. Length: 4 cm, width: 1.2 cm



Torque tool

Torque screwdriver - TSD 04 SAC - 1208429



Torque screwdriver, with preset torque of 0.4 Nm and 4 mm hexagonal drive for M12 connectors

---

Torque screwdriver - TSD 08 SAC - 1212597



Torque screw driver with preset torque of 0.8 Nm, with 4 mm hexagon for accommodating SAC bits, two-component handle with non-slip grip

---

Torque screwdriver - TSD-M 1,2NM - 1212224



Torque screw driver, accuracy as per EN ISO 6789 standard, adjustable from 0.3 - 1.2 Nm

---

Connector - SACC-MR-5SC SH SCO - 1432651

Accessories

Torque screwdriver - TSD-M 3NM - 1212225



Torque screw driver, accuracy as per EN ISO 6789 standard, adjustable from 1.2 - 3 Nm

Stripping tool - VS-CABLE-STRIP-VARIO - 1657407



Stripping tool, for the multi-level stripping of shielded cables

Phoenix Contact 2021 © - all rights reserved
http://www.phoenixcontact.com

PHOENIX CONTACT GmbH & Co. KG
Flachsmarktstr. 8
32825 Blomberg
Germany
Tel. +49 5235 300
Fax +49 5235 3 41200
http://www.phoenixcontact.com