NOTES:

1. COLOR CODE AS SHOWN AFTER PLATING WITH A GREEN DOT (.03±.01)
2. DIMENSIONS SHOWN IN BRACKETS [ ] ARE IN MILLIMETERS & SHOWN FOR REFERENCE.

(1) PIN CONTACT
MATERIAL: PHOSPHOR BRONZE
FINISH: GOLD OVER NICKEL

(2) RETAINER CLIP
MATERIAL: BERYLLIUM COPPER
FINISH: GOLD OVER COPPER FLASH

(3) "O" RING
MATERIAL: VITON, 75 DUROMETER

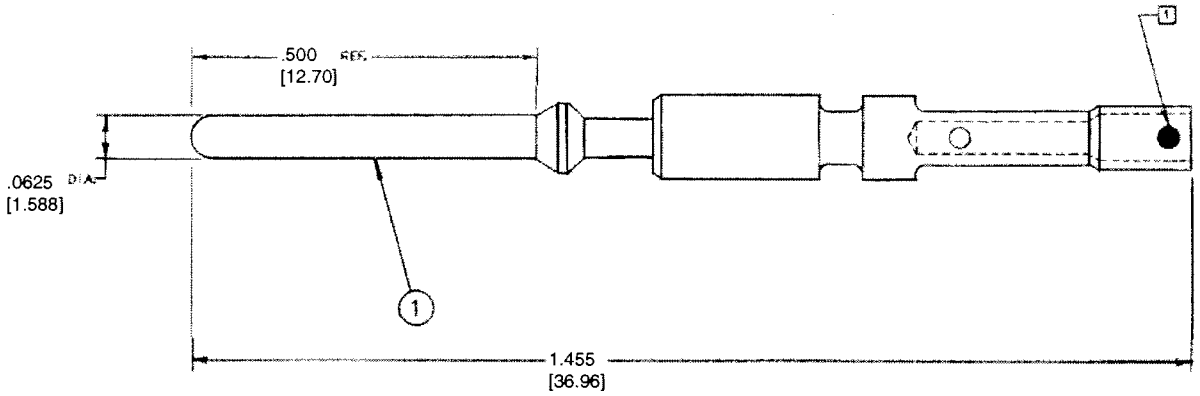

PART NO. 27258-1
SAME AS 27258 EXCEPT:
LESS CLIP AND O-RING

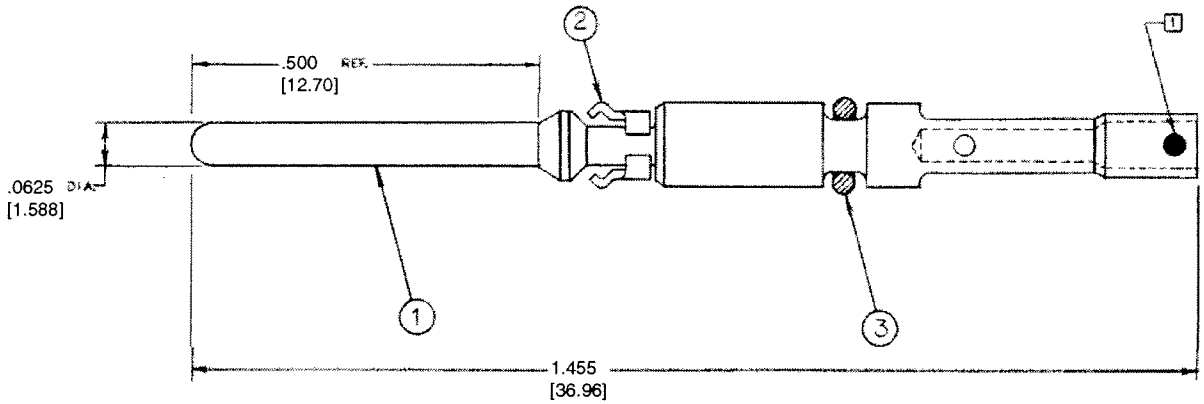

PART NO. 27258

REV B
27258

REV	CHANGE	DATE	DRAWN	PSM
A	RELEASED WR 125-84 EW 18037	5-31-84		10/20/09
B	ADDED 27258-1 PER ER19354			

REF. 10241
DEH 401-190

GENERAL NOTES UNLESS OTHERWISE SPECIFIED
1. ALL DIMENSIONS ARE IN INCHES & MM
2. ALL DIMENSIONS ARE
3. REMOVE ALL BURRS TO ____ MAX.
4. BREAK ALL SHARP EDGES EQ. TO ____ R. MAX.
5. ____ R. MAX. ON INSIDE CORNERS.
6. ALL DIAMETERS CONCENTRIC ____ T.I.R. MAX.
7. GENERAL SURFACE FINISH TO BE ____ MAX.
8. TOLERANCES
.XX ± (±)
.XXX ± .007 (±)
ANGLES ± ____
CLASSIFICATION OF CHARACTERISTICS PER MIL-STD 105
MAJOR ____
MINOR ____

B

TITLE PIN CONTACT ASS'Y. OUTLINE
ACCOMODATES 20,22,24 WIRE

SCALE 10:1 | DR. DONNA | DATE 5-31-84 | CHK. | DATE 7-19-84 | APD. | DATE 6-15-84

WINCHESTER ELECTRONICS

DWG. SIZE C | 27258 | REV B

SCANNED