2713
SMD RF Manual Tunable Inductor
Patent product

SMD RF Manual Tunable Inductor
2713



- **Operated frequency: 10~160 MHz**
- **Q value: 69(no core) , 43(full core)**
- **Inductance tuning range: 397 to 509(nH)**
- **Core material: Aluminum**
- **SRF: 240MHz**
- **Operating temperature: -40℃~+125℃**
- **Rotation times(min): 100**

Features

- SMD package
- High temperature resistance, operating reliably from -40℃ ~125℃ and in other harsh environment
- Hermetic microstrip circuit, reliable and stable over temperature and humidity changes.
- High Q value, linear tunable, available in increasing or decreasing inductance value
- Built with advanced multi-layer processing, high consistence and high reliabilit -y in manufacturing, contributing to good consistence in tuning resonant circuit
- Anti-interference with non-magnetic core, no interference with other devices
- Small size: 6×6×2.5 (mm)
- Termination leads: RoHS compliant, tin or gold over copper
- Low cost, high performance

Applications

- Super Regenerative Receiver Module
- RF Impedance Matching
- Tunable Antennas
- Tuning Resonant Circuit
- Tunable Filter
- Phase Shifter
- Phased Array Radar
- MRI(Magnetic Resonance Imaging)
- NMR(Nuclear Magnetic Resonance)
- Crystal Oscillator
- Broadband Antenna

Characteristic

Typical Q and L vs frequency

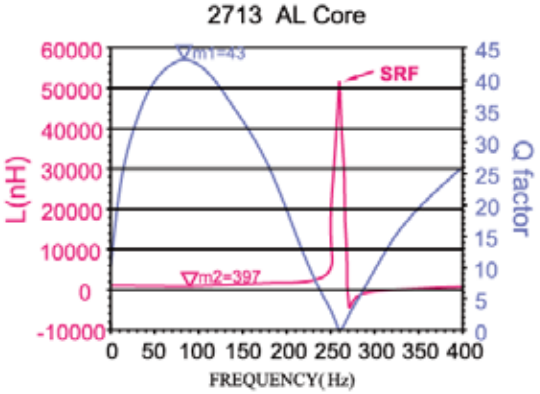

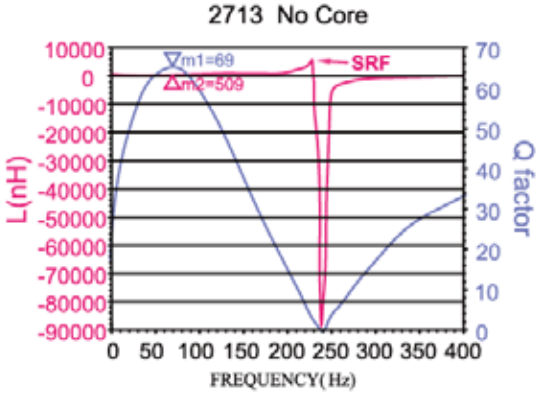

型号	No core		At L max		At L min		Freq at max Q (MHz)	Freq Range at 1/2 Qmax	No core SRF min(MHz)	Irms (A)
	L(nH)	Qmin	L(nH)	Qmin	L(nH)	Qmin				
2713	509	69	509	69	397	43	80	10~160	240	1.2

Notes:

1. Operating frequency is based on the half of the maximum Q value.

Yantel Corporation
Add：3F, Building 3, Southern District 2 of ZhongGuan Honghualing Industrial Park, Xili, Nanshan, Shenzhen, China
Tel：86-755-8355-1886 Fax：86-755-8355-2533
For detailed performance specs & shopping online see Yantel web site : www.yantel-corp.com

Inductance VS The height of the core rotation

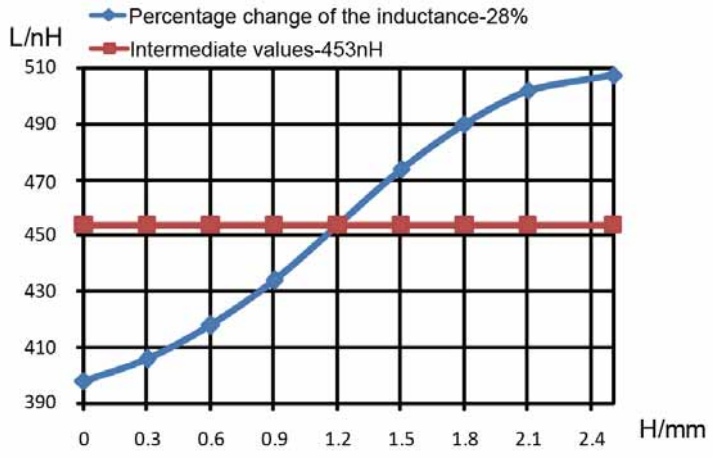

Notes

1. H represents the height of Al core rotation, H max=2.5mm.
2. Inductance changes around the intermediate value.

Package Outlines

All dimensions shown in mm unless stated otherwise

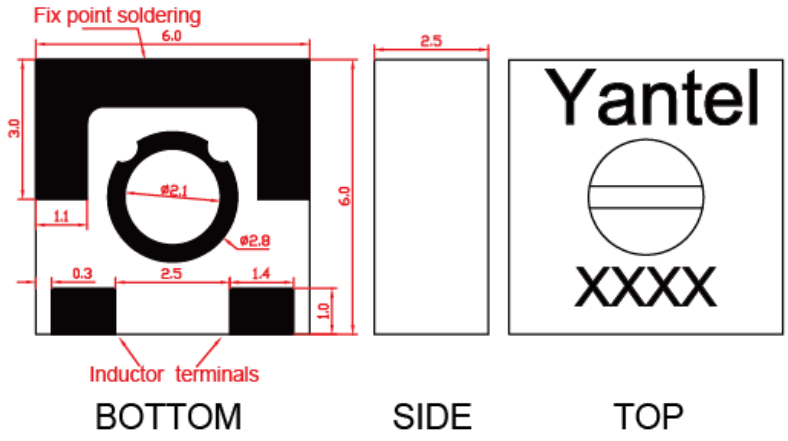

Recommended Layout

All dimensions shown in mm unless stated otherwise

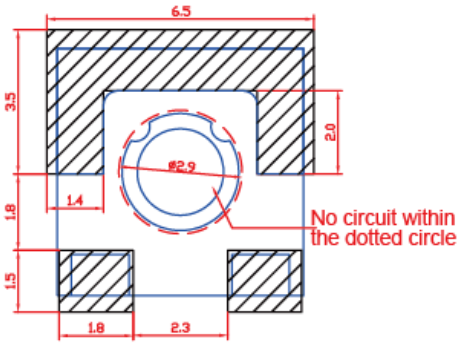

Tape and Reel Drawing

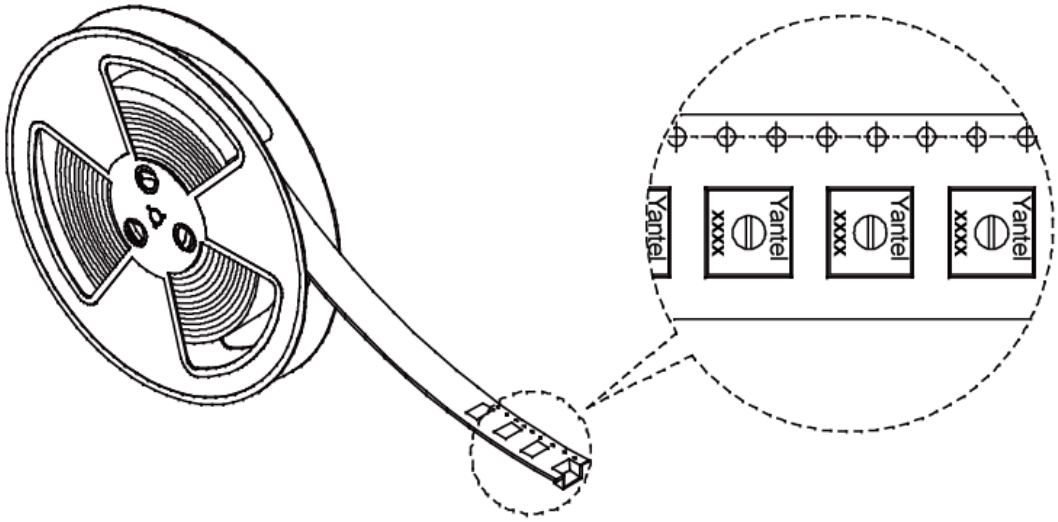

Yantel Corporation
Add：3F, Building 3, Southern District 2 of ZhongGuan Honghualing Industrial Park, Xili, Nanshan, Shenzhen, China
Tel：86-755-8355-1886 Fax：86-755-8355-2533
For detailed performance specs & shopping online see Yantel web site : www.yantel-corp.com