KR Electronics

General Description

KR 2643 is a 49 MHz bandpass filters with a minimum 3 dB bandwidth of 10 MHz. Other passband frequencies are available. Also available in a surface mount package. Please consult the factory.

Features

- 49 MHz Bandpass
- 10 MHz Bandwidth
- High Stopband Attenuation
- 50 Ω Source and Load
- Surface Mount Package

Typical Performance

Passband Amplitude & Group Delay

(1 dB/div and 20 nsec/div)

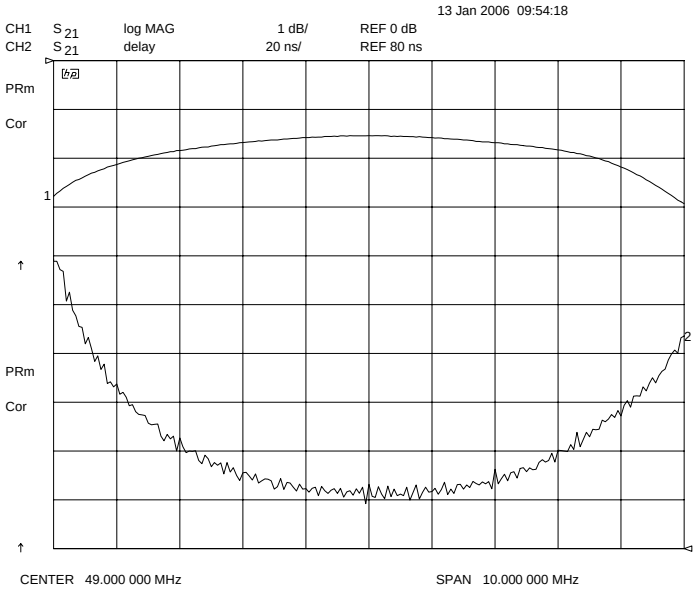

Overall Response

(10 dB/div)

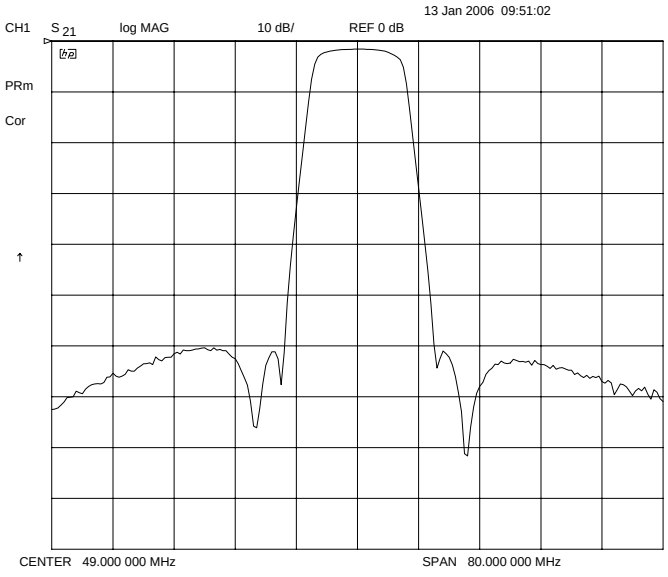

KR Electronics, Inc.
91 Avenel Street
Avenel, NJ 07001

Web *www.krfilters.com*
Email *sales@krfilters.com*
Phone *(732) 636-1900*
Fax *(732) 636-1982*

© 2006, KR Electronics, Inc.

KR 2643 Bandpass

Specifications

Parameter	Specification
Filter type	Bandpass
Center Frequency	49 MHz
Insertion Loss	< 3 dB (< 1.5 dB Typical)
3 dB Bandwidth	> 10 MHz
Attenuation at 39 MHz	> 50 dB
Attenuation at 59 MHz	> 50 dB
Source & Load	50 Ω

Physical Dimensions

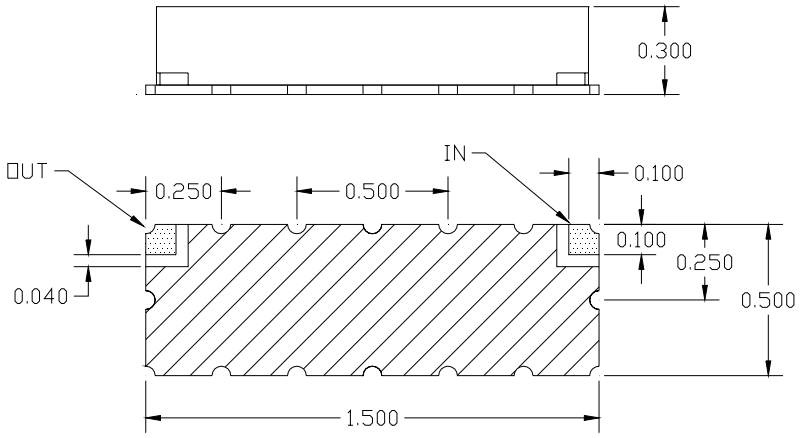

Notes:

1. Surface mount package — Metal cover (can also be supplied in an package with SMA Connectors)
2. Dimensions in inches
3. Use SN60 or SN63 solder during installation. Maximum reflow temperature is 209° C for 15 sec maximum.
4. If boards are cleaned after installation, units must be completely dried to remove any entrapped moisture.

KR Electronics, Inc.
91 Avenel Street
Avenel, NJ 07001

Web *www.krfilters.com*
Email *sales@krfilters.com*
Phone *(732) 636-1900*
Fax *(732) 636-1982*

© 2006, KR Electronics, Inc.