Not recommended for new designs –
Please use 25AA080A/B or 25LC080A/B.

25AA080/25LC080/25C080

8K SPI™ Bus Serial EEPROM

Device Selection Table

Part Number	Vcc Range	Max. Clock Frequency	Temp. Ranges
25AA080	1.8-5.5V	1 MHz	I
25LC080	2.5-5.5V	2 MHz	I
25C080	4.5-5.5V	3 MHz	I,E

Features:

- Low-power CMOS technology:
  - Write current: 3 mA maximum
  - Read current: 500 µA typical
  - Standby current: 500 nA typical
- 1024 x 8-bit organization
- 16 byte page
- Write cycle time: 5 ms max.
- Self-timed erase and write cycles
- Block write protection:
  - Protect none, 1/4, 1/2 or all of array
- Built-in write protection:
  - Power-on/off data protection circuitry
  - Write enable latch
  - Write-protect pin
- Sequential read
- High reliability:
  - Endurance: 1 M cycles
  - Data retention: > 200 years
  - ESD protection: > 4000V
- 8-pin PDIP and SOIC (150 mil)
- Temperature ranges supported:
  - Industrial (I): -40°C to +85°C
  - Automotive (E) (25C080): -40°C to +125°C

Description:

The Microchip Technology Inc. 25AA080/25LC080/25C080 (25XX080*) are 8 Kbit Serial Electrically Erasable PROMs. The memory is accessed via a simple Serial Peripheral Interface™ (SPI™) compatible serial bus. The bus signals required are a clock input (SCK) plus separate data in (SI) and data out (SO) lines. Access to the device is controlled through a Chip Select (CS) input.

Communication to the device can be paused via the hold pin (HOLD). While the device is paused, transitions on its inputs will be ignored, with the exception of chip select, allowing the host to service higher priority interrupts.

Package Types

PDIP/SOIC

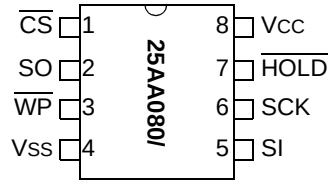

Block Diagram

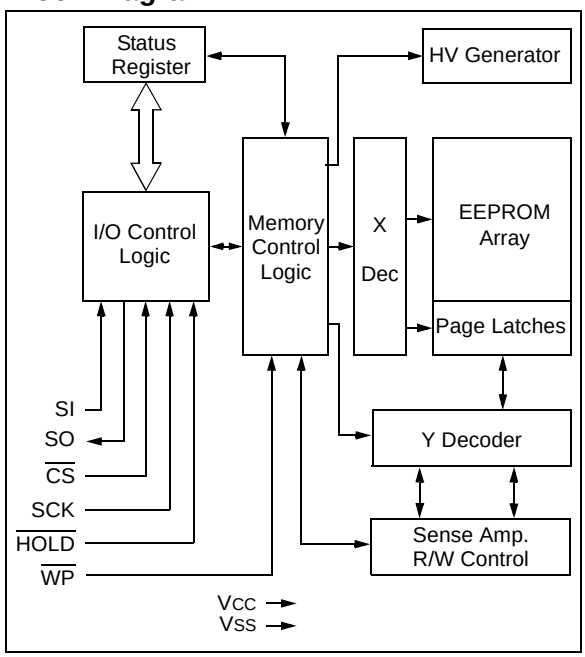

*25XX080 is used in this document as a generic part number for the 25AA080/25LC080/25C080 devices.

SPI™ is a trademark of Motorola Inc.

© 2004 Microchip Technology Inc.

1.0 ELECTRICAL CHARACTERISTICS

Absolute Maximum Ratings(†)

VCC.....7.0V

All inputs and outputs w.r.t. VSS ..... -0.6V to VCC + 1.0V

Storage temperature .....-65°C to 150°C

Ambient temperature under bias.....-40°C to 125°C

Soldering temperature of leads (10 seconds) .....+300°C

ESD protection on all pins..... 4 KV

† NOTICE**:** Stresses above those listed under 'Maximum ratings' may cause permanent damage to the device. This is a stress rating only and functional operation of the device at those or any other conditions above those indicated in the operational listings of this specification is not implied. Exposure to maximum rating conditions for an extended period of time may affect device reliability.

1.1 DC Characteristics

DC CHARACTERISTICS			Industrial (I): TA = -40°C to +85°C VCC = 1.8V to 5.5V Automotive (E): TA = -40°C to +125°C VCC = 4.5V to 5.5V (25C080 only)			
Param. No.	**Sym.**	**Characteristic**	**Min.**	**Max.**	**Units**	**Test Conditions**
D001	VIH1	High-level input voltage	2.0	VCC+1	V	VCC ≥ 2.7V **(Note)**
D002	VIH2		0.7 VCC	VCC+1	V	VCC< 2.7V **(Note)**
D003	VIL1	Low-level input voltage	-0.3	0.8	V	VCC ≥ 2.7V **(Note)**
D004	VIL2		-0.3	0.3 VCC	V	VCC < 2.7V **(Note)**
D005	VOL	Low-level output voltage	—	0.4	V	IOL = 2.1 mA
D006	VOL		—	0.2	V	IOL = 1.0 mA, VCC < 2.5V
D007	VOH	High-level output voltage	VCC -0.5	—	V	IOH = -400 µA
D008	ILI	Input leakage current	-10	10	µA	$\overline{CS}$ = VCC, VIN = VSS TO VCC
D009	ILO	Output leakage current	-10	10	µA	$\overline{CS}$ = VCC, VOUT = VSS TO VCC
D010	CINT	Internal Capacitance (all inputs and outputs)	—	7	pF	TA = 25°C, CLK = 1.0 MHz, VCC = 5.0V **(Note)**
D011	ICC Read	Operating Current	— —	1 500	mA µA	VCC = 5.5V; FCLK = 3.0 MHz; SO = Open VCC = 2.5V; FCLK = 2.0 MHz; SO = Open
D012	ICC Write		— —	5 3	mA mA	VCC = 5.5V VCC = 2.5V
D013	ICCS	Standby Current	— —	5 1	µA µA	$\overline{CS}$ = VCC = 5.5V, Inputs tied to VCC or VSS $\overline{CS}$ = VCC = 2.5V, Inputs tied to VCC or VSS

Note: This parameter is periodically sampled and not 100% tested.

© 2004 Microchip Technology Inc.

1.2 AC Characteristics

AC CHARACTERISTICS			Industrial (I): TA = -40°C to +85°C VCC = 1.8V to 5.5V Automotive (E): TA = -40°C to +125°C VCC = 4.5V to 5.5V (25C080 only)			
Param. No.	**Sym.**	**Characteristic**	**Min.**	**Max.**	**Units**	**Test Conditions**
1	FCLK	Clock Frequency	— — —	3 2 1	MHz MHz MHz	VCC = 4.5V to 5.5V VCC = 2.5V to 4.5V VCC = 1.8V to 2.5V
2	TCSS	$\overline{CS}$ Setup Time	100 250 500	— — —	ns ns ns	VCC = 4.5V to 5.5V VCC = 2.5V to 4.5V VCC = 1.8V to 2.5V
3	TCSH	$\overline{CS}$ Hold Time	150 250 475	— — —	ns ns ns	VCC = 4.5V to 5.5V VCC = 2.5V to 4.5V VCC = 1.8V to 2.5V
4	TCSD	$\overline{CS}$ Disable Time	500	—	ns	—
5	Tsu	Data Setup Time	30 50 50	— — —	ns ns ns	VCC = 4.5V to 5.5V VCC = 2.5V to 4.5V VCC = 1.8V to 2.5V
6	THD	Data Hold Time	50 100 100	— — —	ns ns ns	VCC = 4.5V to 5.5V VCC = 2.5V to 4.5V VCC = 1.8V to 2.5V
7	TR	CLK Rise Time	—	2	µs	**(Note 1)**
8	TF	CLK Fall Time	—	2	µs	**(Note 1)**
9	THI	Clock High Time	150 230 475	— — —	ns ns ns	VCC = 4.5V to 5.5V VCC = 2.5V to 4.5V VCC = 1.8V to 2.5V
10	TLO	Clock Low Time	150 230 475	— — —	ns ns ns	VCC = 4.5V to 5.5V VCC = 2.5V to 4.5V VCC = 1.8V to 2.5V
11	TCLD	Clock Delay Time	50	—	ns	—
12	TCLE	Clock Enable Time	50	—	ns	—
13	TV	Output Valid from Clock Low	— — —	150 230 475	ns ns ns	VCC = 4.5V to 5.5V VCC = 2.5V to 4.5V VCC = 1.8V to 2.5V
14	THO	Output Hold Time	0	—	ns	**(Note 1)**
15	TDIS	Output Disable Time	— — —	200 250 500	ns ns ns	VCC = 4.5V to 5.5V **(Note 1)** VCC = 2.5V to 4.5V **(Note 1)** VCC = 1.8V to 2.5V **(Note 1)**
16	THS	$\overline{HOLD}$ Setup Time	100 100 200	— — —	ns ns ns	VCC = 4.5V to 5.5V VCC = 2.5V to 4.5V VCC = 1.8V to 2.5V
17	THH	$\overline{HOLD}$ Hold Time	100 100 200	— — —	ns ns ns	VCC = 4.5V to 5.5V VCC = 2.5V to 4.5V VCC = 1.8V to 2.5V
18	THZ	$\overline{HOLD}$ Low to Output High-Z	100 150 200	— — —	ns ns ns	VCC = 4.5V to 5.5V **(Note 1)** VCC = 2.5V to 4.5V **(Note 1)** VCC = 1.8V to 2.5V **(Note 1)**
19	THV	$\overline{HOLD}$ High to Output Valid	100 150 200	— — —	ns ns ns	VCC = 4.5V to 5.5V VCC = 2.5V to 4.5V VCC = 1.8V to 2.5V
20	TWC	Internal Write Cycle Time	—	5	ms	—
21	—	Endurance	1M	—	E/W Cycles	**(Note 2)**

Note 1: This parameter is periodically sampled and not 100% tested.

2: This parameter is not tested but ensured by characterization. For endurance estimates in a specific application, please consult the Total Endurance™ Model which can be obtained from Microchip's web site at: www.microchip.com.

FIGURE 1-1: HOLD TIMING

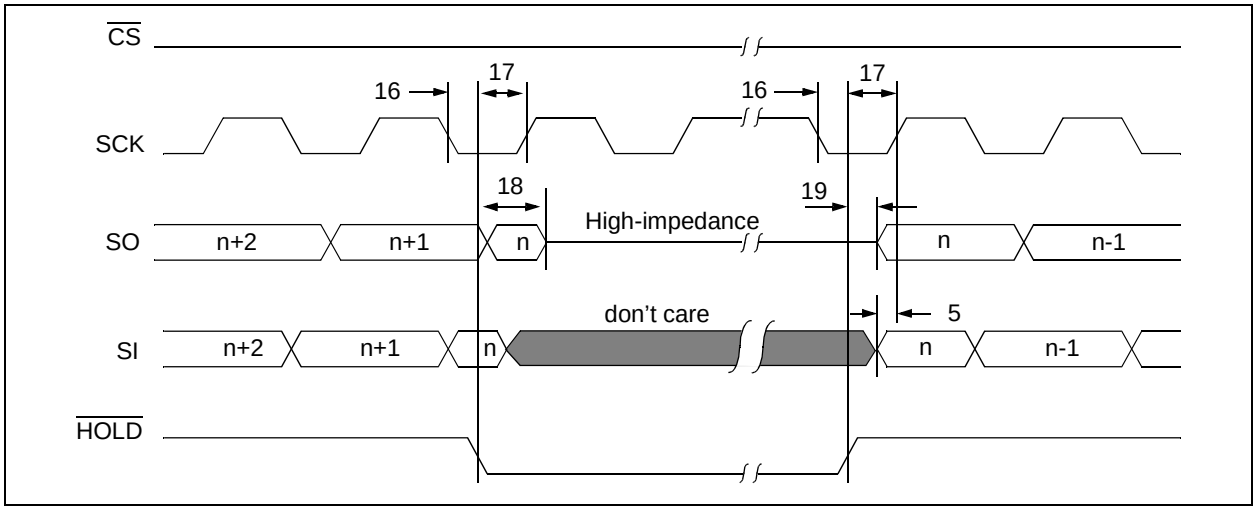

FIGURE 1-2: SERIAL INPUT TIMING

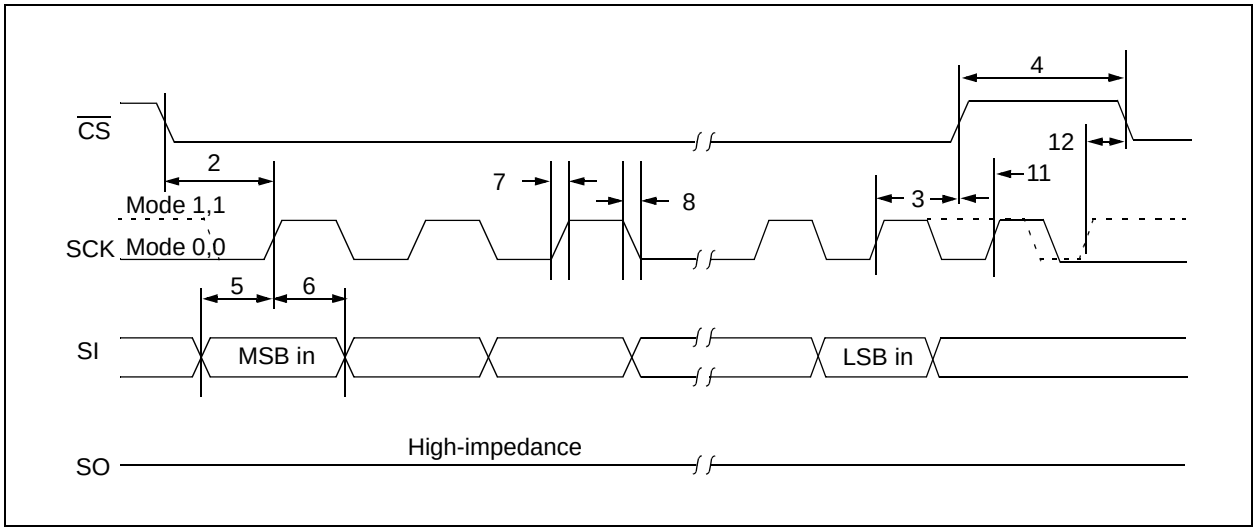

FIGURE 1-3: SERIAL OUTPUT TIMING

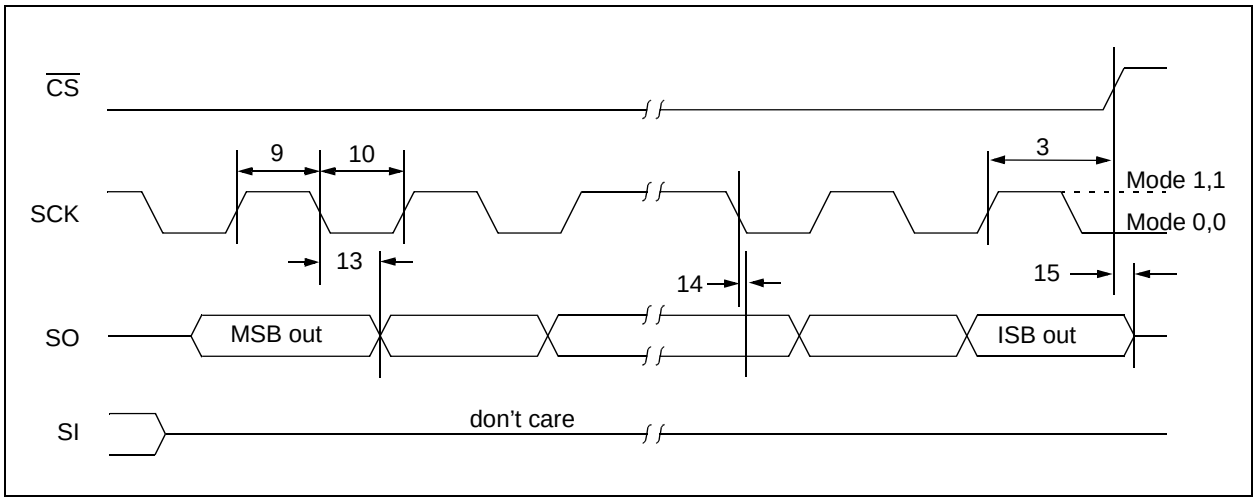

© 2004 Microchip Technology Inc.

1.3 AC Test Conditions

AC Waveform:	
V_{LO} = 0.2V	—
V_{HI} = V_{CC} - 0.2V	**(Note 1)**
V_{HI} = 4.0V	**(Note 2)**
Timing Measurement Reference Level	
Input	0.5 V_{CC}
Output	0.5 V_{CC}

Note 1: For $V_{CC} \leq 4.0V$

2: For $V_{CC} > 4.0V$

FIGURE 1-4: AC TEST CIRCUIT

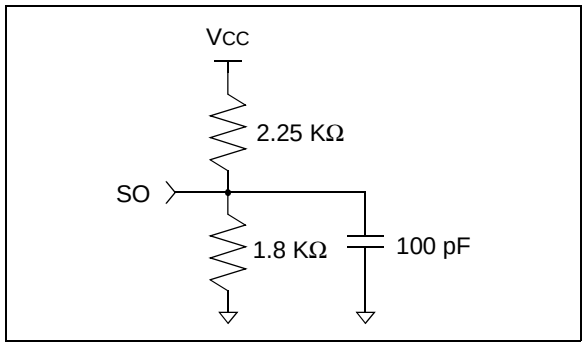

2.0 PIN DESCRIPTIONS

The descriptions of the pins are listed in Table 2-1.

TABLE 2-1: PIN FUNCTION TABLE

Name	PDIP	SOIC	Function
$\overline{CS}$	1	1	Chip Select Input
SO	2	2	Serial Data Output
$\overline{WP}$	3	3	Write-Protect Pin
Vss	4	4	Ground
SI	5	5	Serial Data Input
SCK	6	6	Serial Clock Input
$\overline{HOLD}$	7	7	Hold Input
Vcc	8	8	Supply Voltage

2.1 Chip Select ($\overline{CS}$)

A low level on this pin selects the device. A high level deselects the device and forces it into Standby mode. However, a programming cycle which is already initiated or in progress will be completed, regardless of the $\overline{CS}$ input signal. If $\overline{CS}$ is brought high during a program cycle, the device will go into Standby mode as soon as the programming cycle is complete. When the device is deselected, SO goes to the high-impedance state, allowing multiple parts to share the same SPI bus. A low-to-high transition on $\overline{CS}$ after a valid write sequence initiates an internal write cycle. After power-up, a low level on $\overline{CS}$ is required prior to any sequence being initiated.

2.2 Serial Output (SO)

The SO pin is used to transfer data out of the 25XX080. During a read cycle, data is shifted out on this pin after the falling edge of the serial clock.

2.3 Write-Protect ($\overline{WP}$)

This pin is used in conjunction with the WPEN bit in the Status register to prohibit writes to the nonvolatile bits in the Status register. When $\overline{WP}$ is low and WPEN is high, writing to the nonvolatile bits in the Status register is disabled. All other operations function normally. When $\overline{WP}$ is high, all functions, including writes to the nonvolatile bits in the Status register operate normally. If the WPEN bit is set, $\overline{WP}$ low during a Status register write sequence will disable writing to the Status register. If an internal write cycle has already begun, $\overline{WP}$ going low will have no effect on the write.

The $\overline{WP}$ pin function is blocked when the WPEN bit in the Status register is low. This allows the user to install the 25XX080 in a system with $\overline{WP}$ pin grounded and still be able to write to the Status register. The $\overline{WP}$ pin functions will be enabled when the WPEN bit is set high.

2.4 Serial Input (SI)

The SI pin is used to transfer data into the device. It receives instructions, addresses and data. Data is latched on the rising edge of the serial clock.

2.5 Serial Clock (SCK)

The SCK is used to synchronize the communication between a master and the 25XX080. Instructions, addresses or data present on the SI pin are latched on the rising edge of the clock input, while data on the SO pin is updated after the falling edge of the clock input.

2.6 Hold ($\overline{HOLD}$)

The $\overline{HOLD}$ pin is used to suspend transmission to the 25XX080 while in the middle of a serial sequence without having to retransmit the entire sequence again. It must be held high any time this function is not being used. Once the device is selected and a serial sequence is underway, the $\overline{HOLD}$ pin may be pulled low to pause further serial communication without resetting the serial sequence. The $\overline{HOLD}$ pin must be brought low while SCK is low, otherwise the HOLD function will not be invoked until the next SCK high-to-low transition. The 25XX080 must remain selected during this sequence. The SI, SCK and SO pins are in a high-impedance state during the time the device is paused and transitions on these pins will be ignored. To resume serial communication, $\overline{HOLD}$ must be brought high while the SCK pin is low, otherwise serial communication will not resume. Lowering the HOLD line at any time will tri-state the SO line.

© 2004 Microchip Technology Inc.

3.0 FUNCTIONAL DESCRIPTION

3.1 Principles of Operation

The 25XX080 are 1024 byte Serial EEPROMs designed to interface directly with the Serial Peripheral Interface (SPI) port of many of today's popular microcontroller families, including Microchip's PIC16C6X/7X microcontrollers. It may also interface with microcontrollers that do not have a built-in SPI port by using discrete I/O lines programmed properly with the software.

The 25XX080 contains an 8-bit instruction register. The device is accessed via the SI pin, with data being clocked in on the rising edge of SCK. The $\overline{CS}$ pin must be low and the $\overline{HOLD}$ pin must be high for the entire operation. The $\overline{WP}$ pin must be held high to allow writing to the memory array.

Table 3-1 contains a list of the possible instruction bytes and format for device operation. All instructions, addresses, and data are transferred MSB first, LSB last.

Data is sampled on the first rising edge of SCK after $\overline{CS}$ goes low. If the clock line is shared with other peripheral devices on the SPI bus, the user can assert the $\overline{HOLD}$ input and place the 25XX080 in 'HOLD' mode. After releasing the $\overline{HOLD}$ pin, operation will resume from the point when the $\overline{HOLD}$ was asserted.

3.2 Read Sequence

The device is selected by pulling $\overline{CS}$ low. The 8-bit READ instruction is transmitted to the 25XX080 followed by the 16-bit address, with the six MSBs of the address being "don't care" bits. After the correct READ instruction and address are sent, the data stored in the memory at the selected address is shifted out on the SO pin. The data stored in the memory at the next address can be read sequentially by continuing to provide clock pulses. The internal address pointer is automatically incremented to the next higher address after each byte of data is shifted out. When the highest address is reached (03FFh), the address counter rolls over to address 0000h allowing the read cycle to be continued indefinitely. The read operation is terminated by raising the $\overline{CS}$ pin (Figure 3-1).

3.3 Write Sequence

Prior to any attempt to write data to the 25XX080, the write enable latch must be set by issuing the WREN instruction (Figure 3-4). This is done by setting $\overline{CS}$ low and then clocking out the proper instruction into the 25XX080. After all eight bits of the instruction are transmitted, the $\overline{CS}$ must be brought high to set the write enable latch. If the write operation is initiated immediately after the WREN instruction without $\overline{CS}$ being brought high, the data will not be written to the array because the write enable latch will not have been properly set.

Once the write enable latch is set, the user may proceed by setting the $\overline{CS}$ low, issuing a WRITE instruction, followed by the 16-bit address, with the six MSBs of the address being "don't care" bits, and then the data to be written. Up to 16 bytes of data can be sent to the 25XX080 before a write cycle is necessary. The only restriction is that all of the bytes must reside in the same page. A page address begins with xxxx xxxx xxxx 0000 and ends with xxxx xxxx xxxx 1111. If the internal address counter reaches xxxx xxxx xxxx 1111 and the clock continues, the counter will roll back to the first address of the page and overwrite any data in the page that may have been written.

For the data to be actually written to the array, the $\overline{CS}$ must be brought high after the Least Significant bit (D0) of the nth data byte has been clocked in. If $\overline{CS}$ is brought high at any other time, the write operation will not be completed. Refer to Figure 3-2 and Figure 3-3 for more detailed illustrations on the byte write sequence and the page write sequence respectively. While the write is in progress, the Status register may be read to check the status of the WPEN, WIP, WEL, BP1 and BP0 bits (Figure 3-6). A read attempt of a memory array location will not be possible during a write cycle. When the write cycle is completed, the write enable latch is reset.

TABLE 3-1: INSTRUCTION SET

Instruction Name	Instruction Format	Description
READ	0000 0011	Read data from memory array beginning at selected address
WRITE	0000 0010	Write data to memory array beginning at selected address
WRDI	0000 0100	Reset the write enable latch (disable write operations)
WREN	0000 0110	Set the write enable latch (enable write operations)
RDSR	0000 0101	Read Status register
WRSR	0000 0001	Write Status register

FIGURE 3-1: READ SEQUENCE

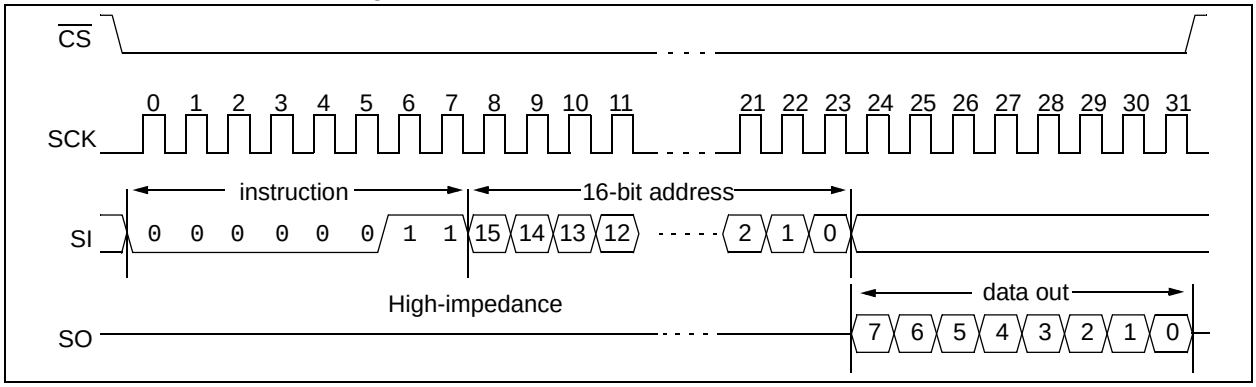

FIGURE 3-2: BYTE WRITE SEQUENCE

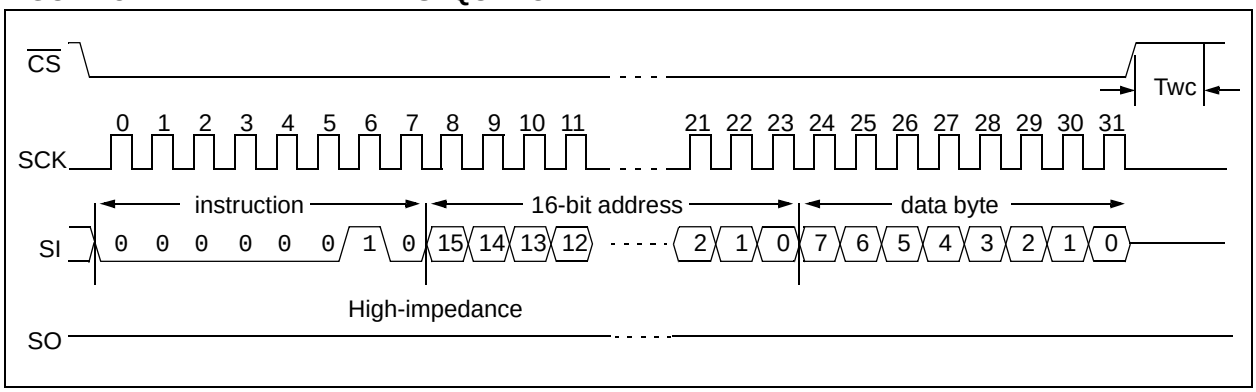

FIGURE 3-3: PAGE WRITE SEQUENCE

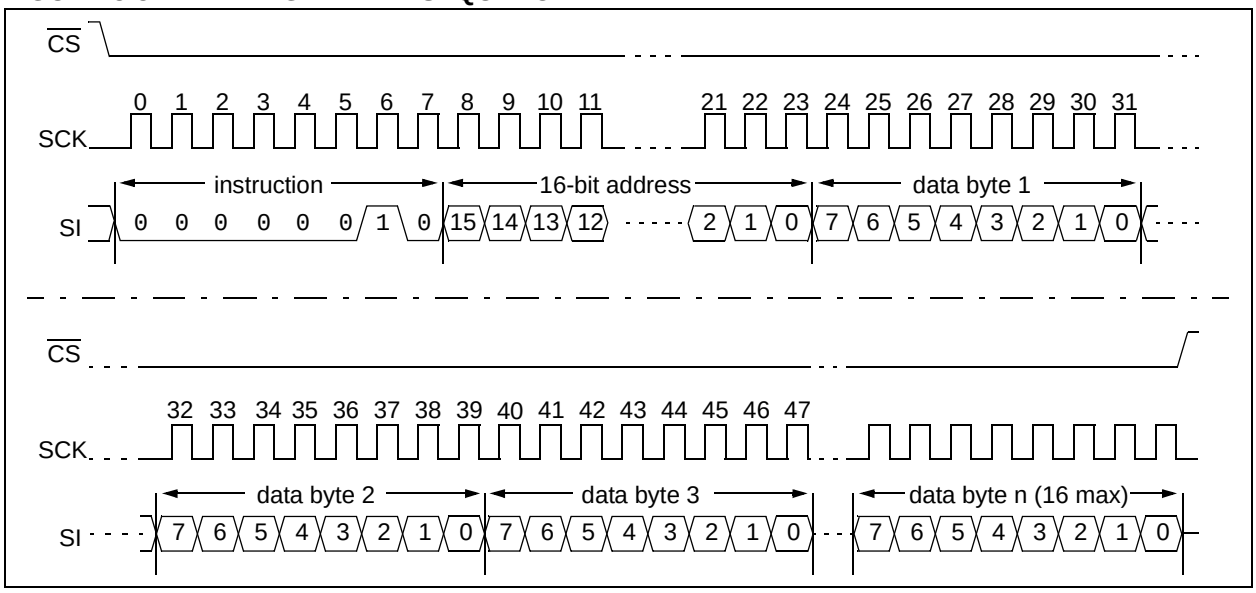

© 2004 Microchip Technology Inc.

3.4 Write Enable (WREN) and Write Disable (WRDI)

The 25XX080 contains a write enable latch. See Table 3-3 for the Write-Protect Functionality Matrix. This latch must be set before any write operation will be completed internally. The WREN instruction will set the latch, and the WRDI will reset the latch.

The following is a list of conditions under which the write enable latch will be reset:

- Power-up
- WRDI instruction successfully executed
- WRSR instruction successfully executed
- WRITE instruction successfully executed

FIGURE 3-4: WRITE ENABLE SEQUENCE

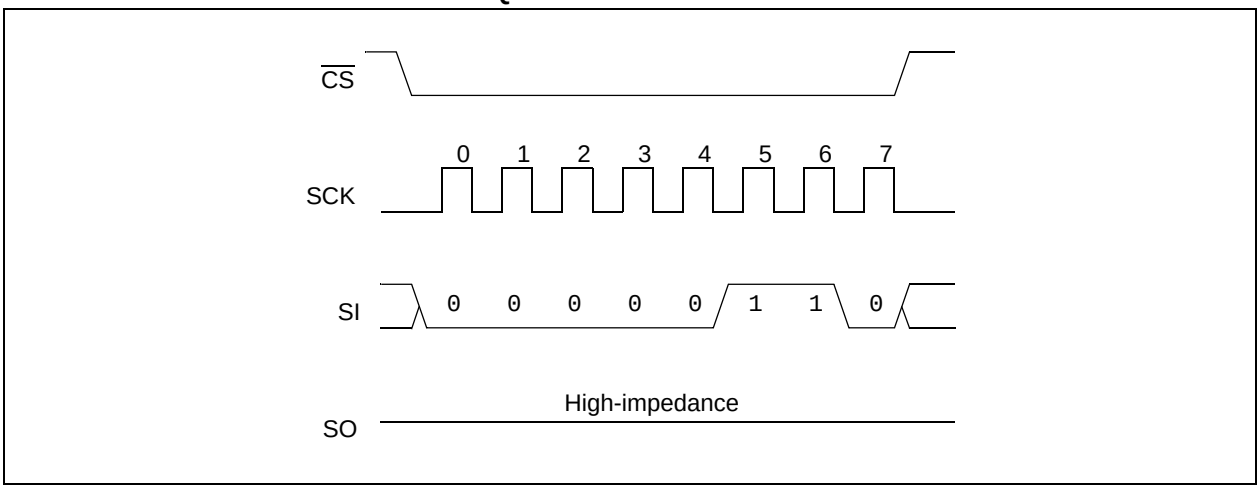

FIGURE 3-5: WRITE DISABLE SEQUENCE

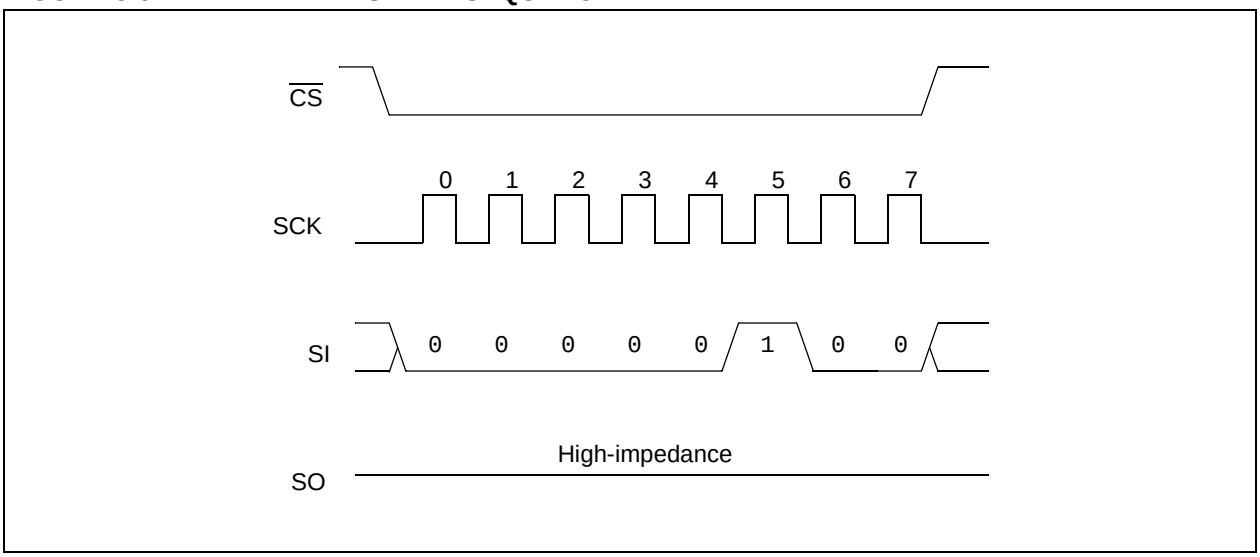

3.5 Read Status Register (RDSR)

The Read Status Register (RDSR) instruction provides access to the Status register. The Status register may be read at any time, even during a write cycle. The Status register is formatted as follows:

7	6	5	4	3	2	1	0
WPEN	X	X	X	BP1	BP0	WEL	WIP

The **Write-In-Process (WIP)** bit indicates whether the 25XX080 is busy with a write operation. When set to a '1', a write is in progress, when set to a '0', no write is in progress. This bit is read-only.

The **Write Enable Latch (WEL)** bit indicates the status of the write enable latch. When set to a '1', the latch allows writes to the array, when set to a '0', the latch prohibits writes to the array. The state of this bit can always be updated via the WREN or WRDI commands regardless of the state of write protection on the Status register. This bit is read only.

The **Block Protection (BP0 and BP1)** bits indicate which blocks are currently write-protected. These bits are set by the user issuing the WRSR instruction. These bits are nonvolatile.

See Figure 3-6 for the RDSR timing sequence.

FIGURE 3-6: READ STATUS REGISTER TIMING SEQUENCE

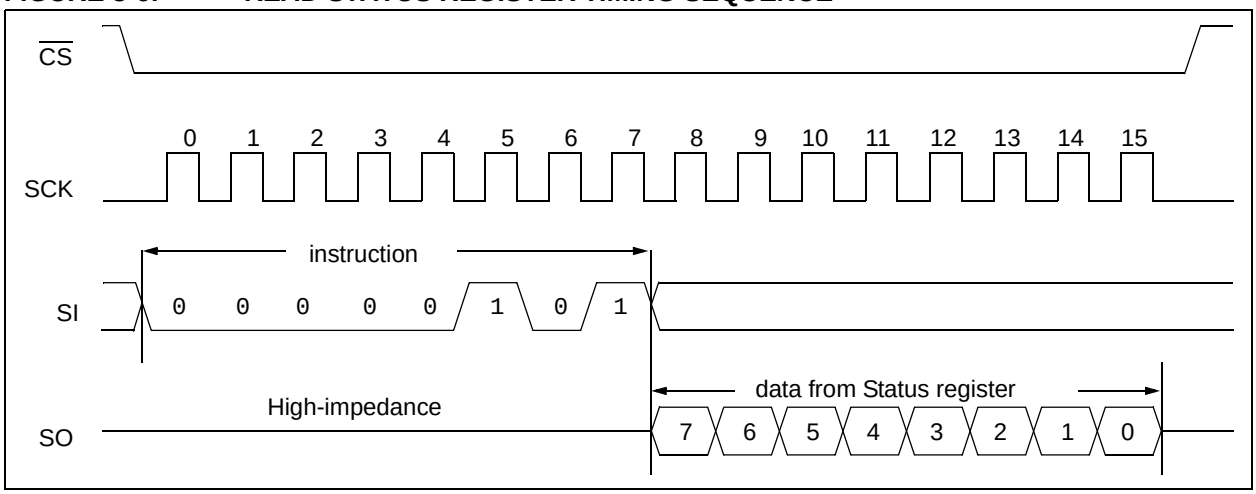

© 2004 Microchip Technology Inc.

3.6 Write Status Register (WRSR)

The Write Status Register (WRSR) instruction allows the user to select one of four levels of protection for the array by writing to the appropriate bits in the Status register. The array is divided up into four segments. The user has the ability to write-protect none, one, two, or all four of the segments of the array. The partitioning is controlled as shown in Table 3-2.

The Write-Protect Enable (WPEN) bit is a nonvolatile bit that is available as an enable bit for the $\overline{WP}$ pin. The Write-Protect ($\overline{WP}$) pin and the Write-Protect Enable (WPEN) bit in the Status register control the programmable hardware write-protect feature. Hardware write protection is enabled when $\overline{WP}$ pin is low and the WPEN bit is high. Hardware write protection is disabled when either the $\overline{WP}$ pin is high or the WPEN bit is low. When the chip is hardware write-protected, only writes to nonvolatile bits in the Status register are disabled. See Table 3-3 for a matrix of functionality on the WPEN bit.

See Figure 3-5 for the WRSR timing sequence.

TABLE 3-2: ARRAY PROTECTION

BP1	BP0	Array Addresses Write-Protected
0	0	none
0	1	upper 1/4 (0300h - 03FFh)
1	0	upper 1/2 (0200h - 03FFh)
1	1	all (0000h - 03FFh)

FIGURE 3-7: WRITE STATUS REGISTER TIMING SEQUENCE

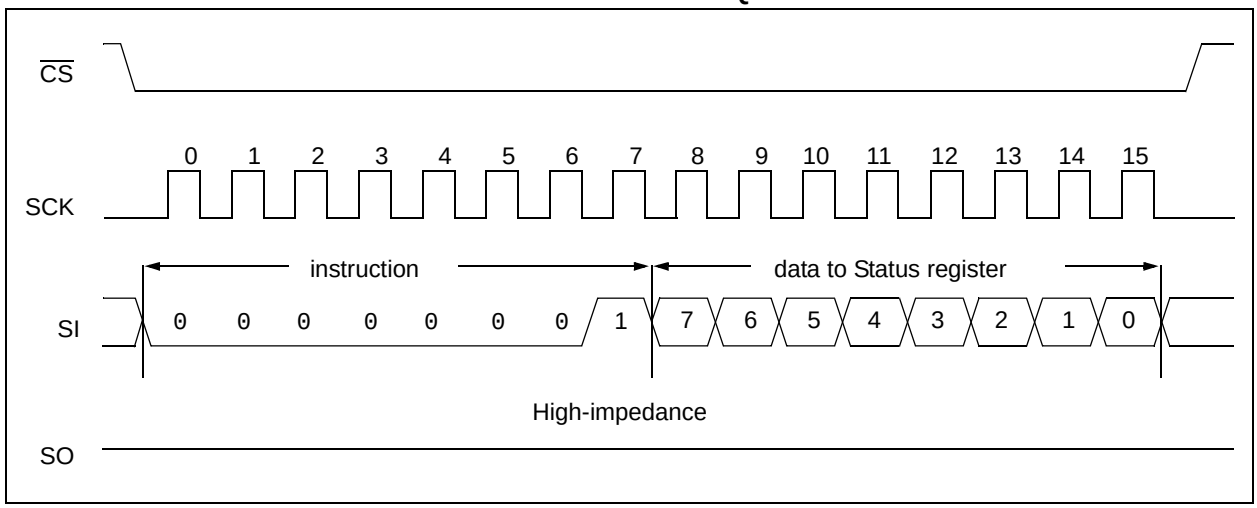

3.7 Data Protection

The following protection has been implemented to prevent inadvertent writes to the array:

- The write enable latch is reset on power-up
- A WRITE ENABLE instruction must be issued to set the write enable latch
- After a byte write, page write or Status register write, the write enable latch is reset
- $\overline{CS}$ must be set high after the proper number of clock cycles to start an internal write cycle
- Access to the array during an internal write cycle is ignored and programming is continued

3.8 Power-On State

The 25XX080 powers on in the following state:

- The device is in low-power Standby mode ($\overline{CS}$ = 1)
- The write enable latch is reset
- SO is in high-impedance state
- A high-to-low level transition on $\overline{CS}$ is required to enter active state

TABLE 3-3: WRITE-PROTECT FUNCTIONALITY MATRIX

WPEN	$\overline{WP}$	WEL	Protected Blocks	Unprotected Blocks	Status Register
X	X	0	Protected	Protected	Protected
0	X	1	Protected	Writable	Writable
1	Low	1	Protected	Writable	Protected
X	High	1	Protected	Writable	Writable

© 2004 Microchip Technology Inc.

4.0 PACKAGING INFORMATION

4.1 Package Marking Information

8-Lead PDIP (300 mil)

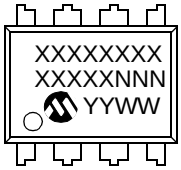

Example:

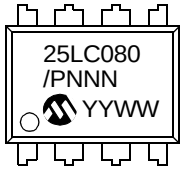

8-Lead SOIC (150 mil)

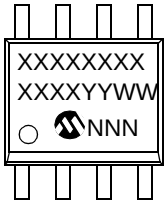

Example:

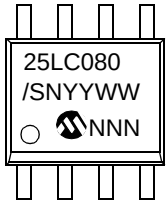

Legend:	XX...X	Customer specific information*
	Y	Year code (last digit of calendar year)
	YY	Year code (last 2 digits of calendar year)
	WW	Week code (week of January 1 is week ‘01’)
	NNN	Alphanumeric traceability code

Note: In the event the full Microchip part number cannot be marked on one line, it will be carried over to the next line thus limiting the number of available characters for customer specific information.

***** Standard PICmicro device marking consists of Microchip part number, year code, week code, and traceability code. For PICmicro device marking beyond this, certain price adders apply. Please check with your Microchip Sales Office. For QTP devices, any special marking adders are included in QTP price.

8-Lead Plastic Dual In-line (P) – 300 mil (PDIP)

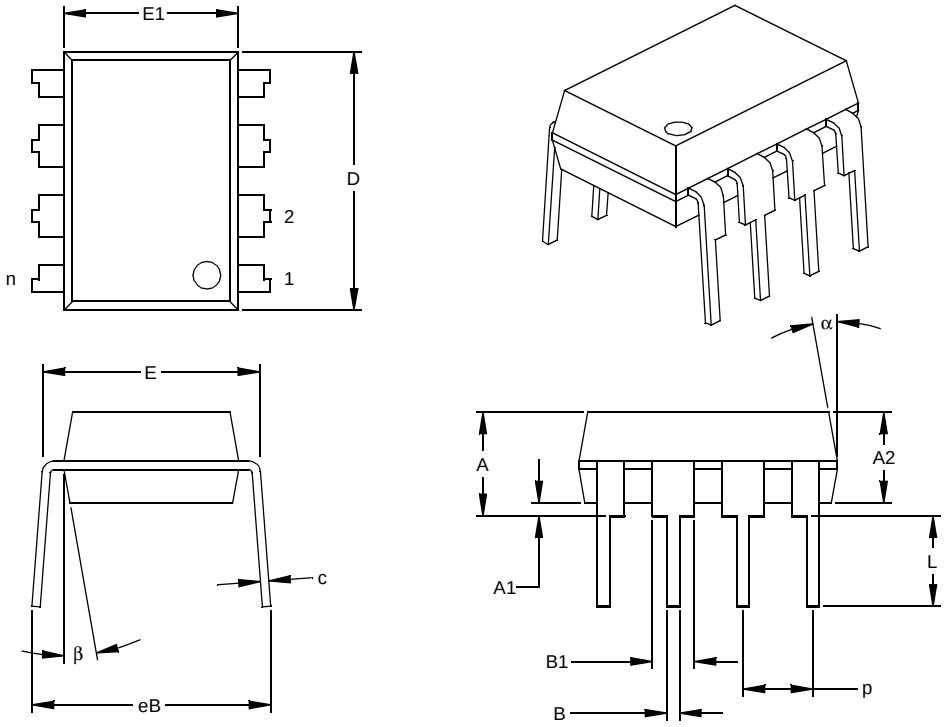

Units		INCHES*			MILLIMETERS		
Dimension Limits		MIN	NOM	MAX	MIN	NOM	MAX
Number of Pins	n		8			8	
Pitch	p		.100			2.54	
Top to Seating Plane	A	.140	.155	.170	3.56	3.94	4.32
Molded Package Thickness	A2	.115	.130	.145	2.92	3.30	3.68
Base to Seating Plane	A1	.015			0.38		
Shoulder to Shoulder Width	E	.300	.313	.325	7.62	7.94	8.26
Molded Package Width	E1	.240	.250	.260	6.10	6.35	6.60
Overall Length	D	.360	.373	.385	9.14	9.46	9.78
Tip to Seating Plane	L	.125	.130	.135	3.18	3.30	3.43
Lead Thickness	c	.008	.012	.015	0.20	0.29	0.38
Upper Lead Width	B1	.045	.058	.070	1.14	1.46	1.78
Lower Lead Width	B	.014	.018	.022	0.36	0.46	0.56
Overall Row Spacing §	eB	.310	.370	.430	7.87	9.40	10.92
Mold Draft Angle Top	α	5	10	15	5	10	15
Mold Draft Angle Bottom	β	5	10	15	5	10	15

* Controlling Parameter
§ Significant Characteristic

Notes:
Dimensions D and E1 do not include mold flash or protrusions. Mold flash or protrusions shall not exceed .010” (0.254mm) per side.
JEDEC Equivalent: MS-001
Drawing No. C04-018

© 2004 Microchip Technology Inc.

8-Lead Plastic Small Outline (SN) – Narrow, 150 mil (SOIC)

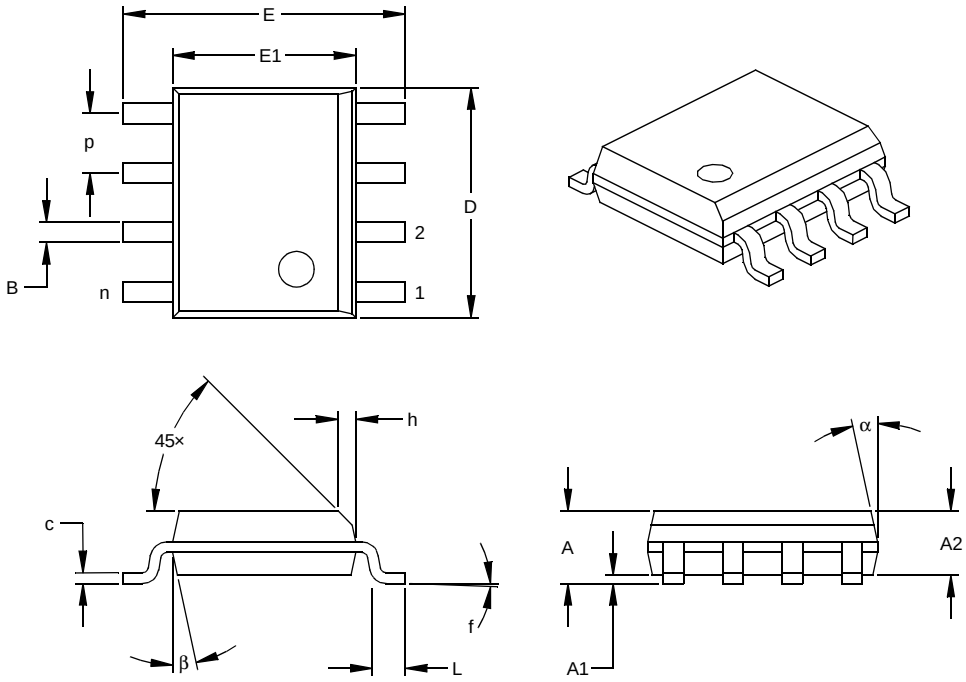

Units		INCHES*			MILLIMETERS		
Dimension Limits		MIN	NOM	MAX	MIN	NOM	MAX
Number of Pins	n		8			8	
Pitch	p		.050			1.27	
Overall Height	A	.053	.061	.069	1.35	1.55	1.75
Molded Package Thickness	A2	.052	.056	.061	1.32	1.42	1.55
Standoff §	A1	.004	.007	.010	0.10	0.18	0.25
Overall Width	E	.228	.237	.244	5.79	6.02	6.20
Molded Package Width	E1	.146	.154	.157	3.71	3.91	3.99
Overall Length	D	.189	.193	.197	4.80	4.90	5.00
Chamfer Distance	h	.010	.015	.020	0.25	0.38	0.51
Foot Length	L	.019	.025	.030	0.48	0.62	0.76
Foot Angle	f	0	4	8	0	4	8
Lead Thickness	c	.008	.009	.010	0.20	0.23	0.25
Lead Width	B	.013	.017	.020	0.33	0.42	0.51
Mold Draft Angle Top	α	0	12	15	0	12	15
Mold Draft Angle Bottom	β	0	12	15	0	12	15

* Controlling Parameter
§ Significant Characteristic

Notes:
Dimensions D and E1 do not include mold flash or protrusions. Mold flash or protrusions shall not exceed .010” (0.254mm) per side.
JEDEC Equivalent: MS-012
Drawing No. C04-057

APPENDIX A: REVISION HISTORY

Revision D

Added note to page 1 header (Not recommended for new designs).

Updated document format.

© 2004 Microchip Technology Inc.

ON-LINE SUPPORT

Microchip provides on-line support on the Microchip World Wide Web site.

The web site is used by Microchip as a means to make files and information easily available to customers. To view the site, the user must have access to the Internet and a web browser, such as Netscape® or Microsoft® Internet Explorer. Files are also available for FTP download from our FTP site.

Connecting to the Microchip Internet Web Site

The Microchip web site is available at the following URL:

www.microchip.com

The file transfer site is available by using an FTP service to connect to:

ftp://ftp.microchip.com

The web site and file transfer site provide a variety of services. Users may download files for the latest Development Tools, Data Sheets, Application Notes, User's Guides, Articles and Sample Programs. A variety of Microchip specific business information is also available, including listings of Microchip sales offices, distributors and factory representatives. Other data available for consideration is:

- Latest Microchip Press Releases
- Technical Support Section with Frequently Asked Questions
- Design Tips
- Device Errata
- Job Postings
- Microchip Consultant Program Member Listing
- Links to other useful web sites related to Microchip Products
- Conferences for products, Development Systems, technical information and more
- Listing of seminars and events

SYSTEMS INFORMATION AND UPGRADE HOT LINE

The Systems Information and Upgrade Line provides system users a listing of the latest versions of all of Microchip's development systems software products. Plus, this line provides information on how customers can receive the most current upgrade kits. The Hot Line Numbers are:

1-800-755-2345 for U.S. and most of Canada, and

1-480-792-7302 for the rest of the world.

042003

READER RESPONSE

It is our intention to provide you with the best documentation possible to ensure successful use of your Microchip product. If you wish to provide your comments on organization, clarity, subject matter, and ways in which our documentation can better serve you, please FAX your comments to the Technical Publications Manager at (480) 792-4150.

Please list the following information, and use this outline to provide us with your comments about this document.

To: Technical Publications Manager Total Pages Sent _____

RE: Reader Response

From: Name _____

Company _____

Address _____

City / State / ZIP / Country _____

Telephone: (_____) _____ - _____ FAX: (_____) _____ - _____

Application (optional):

Would you like a reply? ___Y ___N

Device: 25AA080/25LC080/25C080 Literature Number: DS21230D

Questions:

1. What are the best features of this document?

2. How does this document meet your hardware and software development needs?

3. Do you find the organization of this document easy to follow? If not, why?

4. What additions to the document do you think would enhance the structure and subject?

5. What deletions from the document could be made without affecting the overall usefulness?

6. Is there any incorrect or misleading information (what and where)?

7. How would you improve this document?

© 2004 Microchip Technology Inc.

PRODUCT IDENTIFICATION SYSTEM

To order or obtain information, e.g., on pricing or delivery, refer to the factory or the listed sales office.

PART NO.	X	/XX	XXX
Device	Temperature Range	Package	Pattern

Device	25AA080: 8 Kbit 1.8V SPI Serial EEPROM 25AA080T: 8 Kbit 1.8V SPI Serial EEPROM (Tape and Reel) 25LC080: 8 Kbit 2.5V SPI Serial EEPROM 25LC080: 8 Kbit 2.5V SPI Serial EEPROM (Tape and Reel) 25C080: 8 Kbit 5.0V SPI Serial EEPROM 25C080: 8 Kbit 5.0V SPI Serial EEPROM (Tape and Reel)	
Temperature Range	I E	= -40°C to +85°C = -40°C to+125°C
Package	P SN	= Plastic DIP (300 mil body), 8-lead = Plastic SOIC (150 mil body), 8-lead

Examples:

a) 25AA080-I/SN: Industrial Temp., SOIC package

b) 25AA080T-I/SN: Tape and Reel, Industrial Temp., SOIC package

c) 25LC080-I/SN: Industrial Temp., SOIC package

d) 25LC080T-I/SN: Tape and Reel, Industrial Temp., SOIC package

e) 25C080-I/P: Industrial Temp., PDIP package

f) 25C080-I/SN: Industrial Temp., SOIC package

g) 25C080T-I/SN: Tape and Reel, Industrial Temp., SOIC package

h) 25C080-E/SN: Extended Temp., SOIC package

Sales and Support

Data Sheets
Products supported by a preliminary Data Sheet may have an errata sheet describing minor operational differences and recommended workarounds. To determine if an errata sheet exists for a particular device, please contact one of the following:

1. Your local Microchip sales office
2. The Microchip Corporate Literature Center U.S. FAX: (480) 792-7277
3. The Microchip Worldwide Site (www.microchip.com)

Please specify which device, revision of silicon and Data Sheet (include Literature #) you are using.

New Customer Notification System
Register on our web site (www.microchip.com/cn) to receive the most current information on our products.

NOTES:

© 2004 Microchip Technology Inc.

Note the following details of the code protection feature on Microchip devices:

- Microchip products meet the specification contained in their particular Microchip Data Sheet.
- Microchip believes that its family of products is one of the most secure families of its kind on the market today, when used in the intended manner and under normal conditions.
- There are dishonest and possibly illegal methods used to breach the code protection feature. All of these methods, to our knowledge, require using the Microchip products in a manner outside the operating specifications contained in Microchip's Data Sheets. Most likely, the person doing so is engaged in theft of intellectual property.
- Microchip is willing to work with the customer who is concerned about the integrity of their code.
- Neither Microchip nor any other semiconductor manufacturer can guarantee the security of their code. Code protection does not mean that we are guaranteeing the product as "unbreakable."

Code protection is constantly evolving. We at Microchip are committed to continuously improving the code protection features of our products. Attempts to break Microchip's code protection feature may be a violation of the Digital Millennium Copyright Act. If such acts allow unauthorized access to your software or other copyrighted work, you may have a right to sue for relief under that Act.

Information contained in this publication regarding device applications and the like is intended through suggestion only and may be superseded by updates. It is your responsibility to ensure that your application meets with your specifications. No representation or warranty is given and no liability is assumed by Microchip Technology Incorporated with respect to the accuracy or use of such information, or infringement of patents or other intellectual property rights arising from such use or otherwise. Use of Microchip's products as critical components in life support systems is not authorized except with express written approval by Microchip. No licenses are conveyed, implicitly or otherwise, under any intellectual property rights.

Trademarks

The Microchip name and logo, the Microchip logo, Accuron, dsPIC, KEELOQ, microID, MPLAB, PIC, PICmicro, PICSTART, PRO MATE, PowerSmart, rfPIC, and SmartShunt are registered trademarks of Microchip Technology Incorporated in the U.S.A. and other countries.

AmpLab, FilterLab, MXDEV, MXLAB, PICMASTER, SEEVAL, SmartSensor and The Embedded Control Solutions Company are registered trademarks of Microchip Technology Incorporated in the U.S.A.

Analog-for-the-Digital Age, Application Maestro, dsPICDEM, dsPICDEM.net, dsPICworks, ECAN, ECONOMONITOR, FanSense, FlexROM, fuzzyLAB, In-Circuit Serial Programming, ICSP, ICEPIC, Migratable Memory, MPASM, MPLIB, MPLINK, MPSIM, PICkit, PICDEM, PICDEM.net, PICLAB, PICtail, PowerCal, PowerInfo, PowerMate, PowerTool, rfLAB, rfPICDEM, Select Mode, Smart Serial, SmartTel and Total Endurance are trademarks of Microchip Technology Incorporated in the U.S.A. and other countries.

SQTP is a service mark of Microchip Technology Incorporated in the U.S.A.

All other trademarks mentioned herein are property of their respective companies.

© 2004, Microchip Technology Incorporated, Printed in the U.S.A., All Rights Reserved.

Printed on recycled paper.

QUALITY MANAGEMENT SYSTEM
CERTIFIED BY DNV
ISO/TS 16949:2002

Microchip received ISO/TS-16949:2002 quality system certification for its worldwide headquarters, design and wafer fabrication facilities in Chandler and Tempe, Arizona and Mountain View, California in October 2003. The Company's quality system processes and procedures are for its PICmicro® 8-bit MCUs, KEELOQ® code hopping devices, Serial EEPROMs, microperipherals, nonvolatile memory and analog products. In addition, Microchip's quality system for the design and manufacture of development systems is ISO 9001:2000 certified.

WORLDWIDE SALES AND SERVICE

AMERICAS

Corporate Office
2355 West Chandler Blvd.
Chandler, AZ 85224-6199
Tel: 480-792-7200
Fax: 480-792-7277
Technical Support: 480-792-7627
Web Address: www.microchip.com

Atlanta
3780 Mansell Road, Suite 130
Alpharetta, GA 30022
Tel: 770-640-0034
Fax: 770-640-0307

Boston
2 Lan Drive, Suite 120
Westford, MA 01886
Tel: 978-692-3848
Fax: 978-692-3821

Chicago
333 Pierce Road, Suite 180
Itasca, IL 60143
Tel: 630-285-0071
Fax: 630-285-0075

Dallas
4570 Westgrove Drive, Suite 160
Addison, TX 75001
Tel: 972-818-7423
Fax: 972-818-2924

Detroit
Tri-Atria Office Building
32255 Northwestern Highway, Suite 190
Farmington Hills, MI 48334
Tel: 248-538-2250
Fax: 248-538-2260

Kokomo
2767 S. Albright Road
Kokomo, IN 46902
Tel: 765-864-8360
Fax: 765-864-8387

Los Angeles
18201 Von Karman, Suite 1090
Irvine, CA 92612
Tel: 949-263-1888
Fax: 949-263-1338

San Jose
1300 Terra Bella Avenue
Mountain View, CA 94043
Tel: 650-215-1444
Fax: 650-961-0286

Toronto
6285 Northam Drive, Suite 108
Mississauga, Ontario L4V 1X5, Canada
Tel: 905-673-0699
Fax: 905-673-6509

ASIA/PACIFIC

Australia
Suite 22, 41 Rawson Street
Epping 2121, NSW
Australia
Tel: 61-2-9868-6733
Fax: 61-2-9868-6755

China - Beijing
Unit 706B
Wan Tai Bei Hai Bldg.
No. 6 Chaoyangmen Bei Str.
Beijing, 100027, China
Tel: 86-10-85282100
Fax: 86-10-85282104

China - Chengdu
Rm. 2401-2402, 24th Floor,
Ming Xing Financial Tower
No. 88 TIDU Street
Chengdu 610016, China
Tel: 86-28-86766200
Fax: 86-28-86766599

China - Fuzhou
Unit 28F, World Trade Plaza
No. 71 Wusi Road
Fuzhou 350001, China
Tel: 86-591-7503506
Fax: 86-591-7503521

China - Hong Kong SAR
Unit 901-6, Tower 2, Metroplaza
223 Hing Fong Road
Kwai Fong, N.T., Hong Kong
Tel: 852-2401-1200
Fax: 852-2401-3431

China - Shanghai
Room 701, Bldg. B
Far East International Plaza
No. 317 Xian Xia Road
Shanghai, 200051
Tel: 86-21-6275-5700
Fax: 86-21-6275-5060

China - Shenzhen
Rm. 1812, 18/F, Building A, United Plaza
No. 5022 Binhe Road, Futian District
Shenzhen 518033, China
Tel: 86-755-82901380
Fax: 86-755-8295-1393

China - Shunde
Room 401, Hongjian Building, No. 2
Fengxiangnan Road, Ronggui Town, Shunde
District, Foshan City, Guangdong 528303, China
Tel: 86-757-28395507 Fax: 86-757-28395571

China - Qingdao
Rm. B505A, Fullhope Plaza,
No. 12 Hong Kong Central Rd.
Qingdao 266071, China
Tel: 86-532-5027355 Fax: 86-532-5027205

India
Divyasree Chambers
1 Floor, Wing A (A3/A4)
No. 11, O'Shaugnessey Road
Bangalore, 560 025, India
Tel: 91-80-22290061 Fax: 91-80-22290062

Japan
Benex S-1 6F
3-18-20, Shinyokohama
Kohoku-Ku, Yokohama-shi
Kanagawa, 222-0033, Japan
Tel: 81-45-471- 6166 Fax: 81-45-471-6122

Korea
168-1, Youngbo Bldg. 3 Floor
Samsung-Dong, Kangnam-Ku
Seoul, Korea 135-882
Tel: 82-2-554-7200 Fax: 82-2-558-5932 or
82-2-558-5934

Singapore
200 Middle Road
#07-02 Prime Centre
Singapore, 188980
Tel: 65-6334-8870 Fax: 65-6334-8850

Taiwan
Kaohsiung Branch
30F - 1 No. 8
Min Chuan 2nd Road
Kaohsiung 806, Taiwan
Tel: 886-7-536-4818
Fax: 886-7-536-4803

Taiwan
Taiwan Branch
11F-3, No. 207
Tung Hua North Road
Taipei, 105, Taiwan
Tel: 886-2-2717-7175 Fax: 886-2-2545-0139

EUROPE

Austria
Durisolstrasse 2
A-4600 Wels
Austria
Tel: 43-7242-2244-399
Fax: 43-7242-2244-393

Denmark
Regus Business Centre
Lautrup hoj 1-3
Ballerup DK-2750 Denmark
Tel: 45-4420-9895 Fax: 45-4420-9910

France
Parc d'Activite du Moulin de Massy
43 Rue du Saule Trapu
Batiment A - ler Etage
91300 Massy, France
Tel: 33-1-69-53-63-20
Fax: 33-1-69-30-90-79

Germany
Steinheilstrasse 10
D-85737 Ismaning, Germany
Tel: 49-89-627-144-0
Fax: 49-89-627-144-44

Italy
Via Quasimodo, 12
20025 Legnano (MI)
Milan, Italy
Tel: 39-0331-742611
Fax: 39-0331-466781

Netherlands
Waegenburghtplein 4
NL-5152 JR, Drunen, Netherlands
Tel: 31-416-690399
Fax: 31-416-690340

United Kingdom
505 Eskdale Road
Winnersh Triangle
Wokingham
Berkshire, England RG41 5TU
Tel: 44-118-921-5869
Fax: 44-118-921-5820

05/28/04

© 2004 Microchip Technology Inc.