Power Cord with IEC Connector C7, Straight 70°C

new



C7

70°C

Description
Power Supply Cord / Interconnection Cord, Protection class II, Pin temperature 70 °C, Cable

Approvals
- VDE License Number: 40005800
- CSA License Number: 1020530

References
General Product Information

Weblinks
Approvals, RoHS, CHINA-RoHS, Mating Connectors, e-Store, Distributor-Stock-Check, Accessories

Technical Data

Ratings IEC	2.5 A / 250 VAC; 50 Hz
Ratings UL/CSA	2.5 A / 250 VAC; 60 Hz
Dielectric Strength	> 3 kVDC between L-N > 1.5 kVAC between L/N-PE (1 min/50 Hz)
Allowable Operation Temp.	-25 °C to 70 °C
Degree of Protection	from front side IP 20 acc. to IEC 60529
Protection Class	Suitable for appliances with protection class 2 acc. to IEC 61140
Terminal	moulded
Material: Housing	PVC, black or grey

Connector	C7 acc. to IEC/EN 60320-2-2 UL 498, CSA C22.2 no. 42 (for cold conditions) pin-temperature 70 °C, 2.5 A, Protection Class 2

Dimensions

19.2 mm

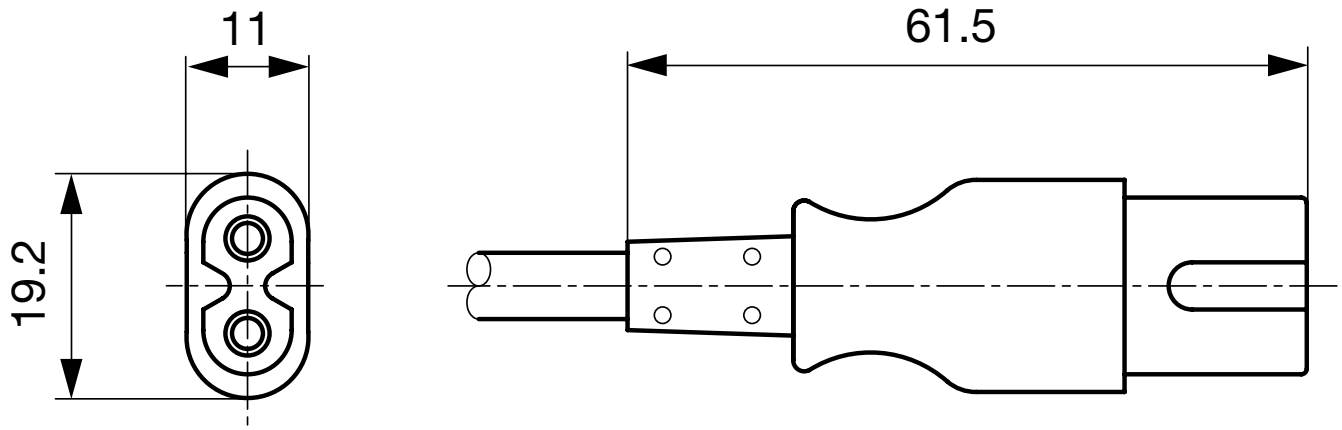

Config. Code

Product Configurator

Type - R - 2510 - D - Length

The characters are placeholders for the correspondingly keys of selections from the key tables.
Typ is placed for the connector type on the second end, length is the cord length in mm.

Type - R - 2510 - D - Length = Cord end 2

Cord end 2
zzzz, 2225, 2228, 2711, 2712, 2730, 2731, 4121, 607B, 608B, 609B

Type - R - 2510 - D - Length = cord type

cord type	Configuration key
H03VV-F 2x0,75mm2	A
H03VVH2-F 2x0,75mm2	B
H05VV-F 2x0,75mm2	D
H05VVH2-F 2x0,75mm2	E
SVT 2x18AWG	M
special cord	Z

Cord definition is detailed in general product information XXX

Type - R - 2510 - D - Length = Color

Color	Configuration key
jet black; RAL9005	A
silver grey; RAL7001	B

standard color: black

Type - R - 2510 - D - Length = Cord length

Cord length
zzzz, 000500, 001000, 001500, 002000, 002500, 003000, 005000

Cord length in mm

Mating Inlets/Plugs



Category / Description	
Appliance Inlet Overview complete	
IEC Appliance Inlet C8, Screw-on Mounting, Rear Side, PCB-/Solder Terminal	0720-FP
IEC Appliance Inlet C8, Screw-on Mounting, Rear Side, Solder Terminal	0720-FS
IEC Appliance Inlet C8, Snap-in Mounting, Front Side, Solder Terminal	0721-PP
IEC Appliance Inlet C8, Snap-in Mounting, Front Side, Solder Terminal	0721-PS
IEC Appliance Inlet C8, insert Mounting, Solder, PCB or Quick-connect Terminal	2572
Appliance Inlet further types to 2510	...



Interconnection Cord Overview complete	
Interconnection Cord with IEC Plug C, Angled 70°C	2711
Interconnection Cord with IEC Plug C, Angled	2712
Interconnection Cord with IEC Plug C, Straight	2730
Interconnection Cord with IEC Plug C, Straight	2731
Interconnection Cord further types to 2510	



Power Entry Module Overview complete	
IEC Appliance Inlet C8 with Line Switch 1-pole	CMF1, CMF4
Power Entry Module further types to 2510	

SCHURTER ELECTRONIC COMPONENTS

The specifications, descriptions and illustrations indicated in this document are based on current information. All content is subject to modifications and amendments.