10/100 BASE-T TWO PORT TRANSFORMER
P/N: 24STS05 LF DATA SHEET

Feature

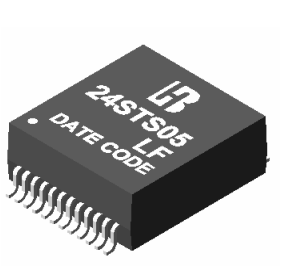

- Designed to meet IEEE802.3u requirement.
- Comply with RoHS requirements-whole part No Cd, No Hg, No Cr6+, No PBB and PBDE and No Pb on external pins.
- Operating temperature range: 0℃ to +70℃.
- Storage temperature range: -25℃ to +125℃.

Electrical Specifications @ 25°C				
Part Number	Turns Ratio (±5%)		OCL (uH Min) @100KHz/0.1V with 8mA DC Bias	HI-POT (Vrms)
	TX	RX		
24STS05 LF	1CT:1CT	1CT:1CT	350	1500

Continue								
Part Number	Insertion Loss (dB Max)		Return Loss (dB Min)			Cross talk (dB Min)		
	0.3MHz	100MHz	30MHz	60MHz	80MHz	30MHz	60MHz	80MHz
24STS05 LF	-1.2	-1.4	-16	-10	-10	-45	-40	-33

Schematic

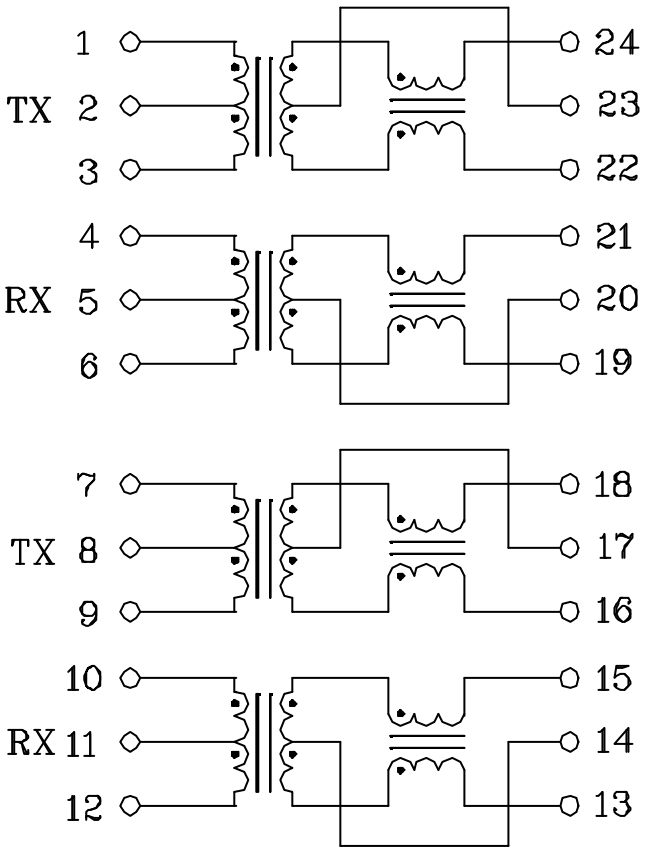

462 Boston St,
Topsfield, MA 01983
http://www.bothhandUSA.com
email:sales@bothhandusa.com
tel: 978-887-8050
fax: 978-887-5434

10/100 BASE-T TWO PORT TRANSFORMER

P/N: 24STS05 LF DATA SHEET

Mechanical

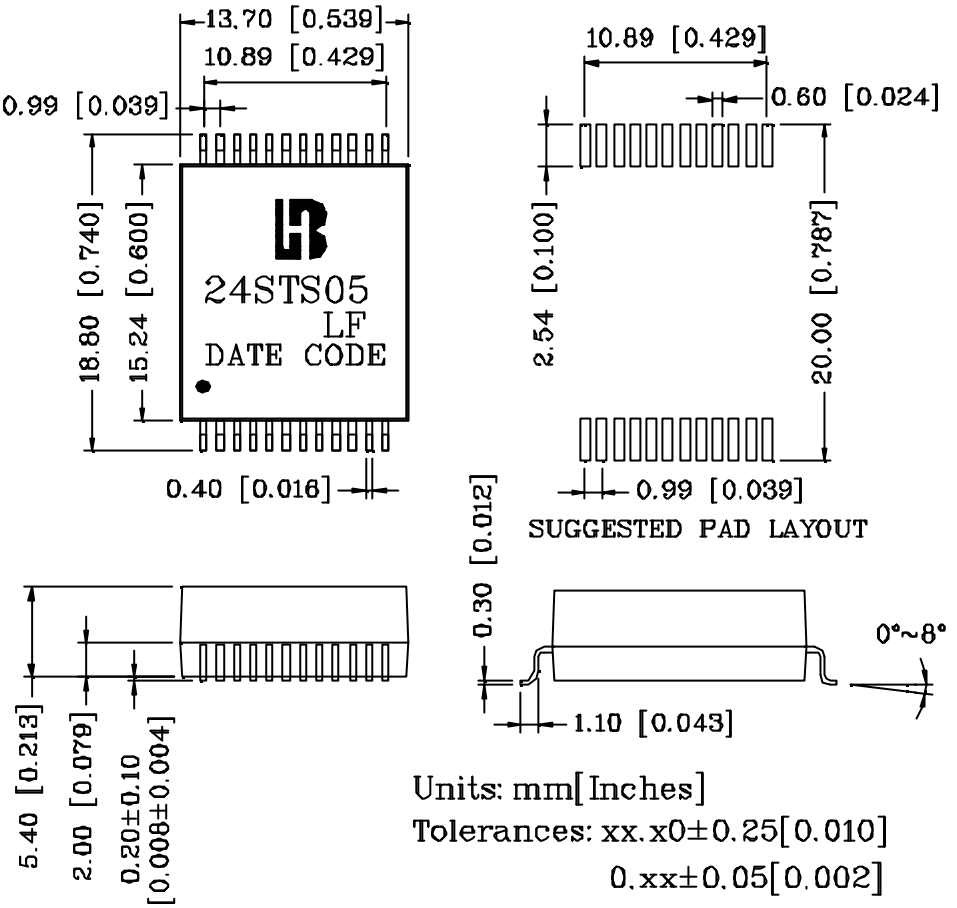

462 Boston St,
Topsfield, MA 01983
http://www.bothhandUSA.com
email:sales@bothhandusa.com
tel: 978-887-8050
fax: 978-887-5434