24AA52/24LCS52

2K 2.2V I²C™ Serial EEPROM with Software Write-Protect

Device Selection Table

Part Number	Vcc Range	Max Clock Frequency	Temp Ranges
24AA52	1.8-5.5	400 kHz(1)	I
24LCS52	2.2-5.5	400 kHz	I

Note 1: 100 kHz for VCC <2.2V

Features:

- Single Supply with Operation Down to 1.8V
- Low-Power CMOS Technology:
  - 1 mA active current, typical
  - 1 μA standby current, typical (I-temp)
- Organized as 1 Block of 256 Bytes (256 x 8)
- Software Write Protection for Lower 128 Bytes
- Hardware Write Protection for Entire Array
- 2-Wire Serial Interface Bus, I²C™ Compatible
- Schmitt Trigger Inputs for Noise Suppression
- Output Slope Control to Eliminate Ground Bounce
- 100 kHz (24AA52) and 400 kHz (24LCS52) Compatibility
- Self-Timed Write Cycle (including auto-erase)
- Page Write Buffer for up to 16 Bytes
- ESD Protection > 4,000V
- 1,000,000 Erase/Write Cycles
- Data Retention > 200 Years
- 8-Lead PDIP, SOIC, TSSOP, MSOP, DFN and TDFN Packages
- Pb-Free Finishes Available
- Available for Extended Temperature Ranges:
  - Industrial (I): -40°C to +85°C

Package Types

PDIP/SOIC/TSSOP/MSOP/DFN/TDFN

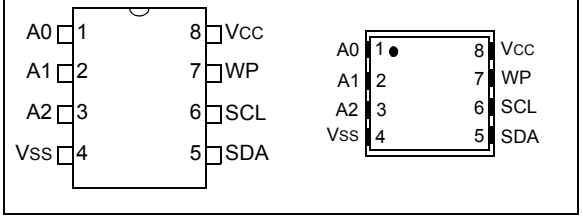

Description:

The Microchip Technology Inc. 24AA52/24LCS52 (24XXX52*) is a 2 Kbit Electrically Erasable PROM capable of operation across a broad voltage range (1.8V to 5.5V). This device has a software write-protect feature for the lower half of the array, as well as an external pin that can be used to write-protect the entire array. The software write-protect feature is enabled by sending the device a special command. Once this feature has been enabled, it cannot be reversed. In addition to the software protect feature, there is a WP pin that can be used to write-protect the entire array, regardless of whether the software write-protect register has been written or not. This allows the system designer to protect none, half, or all of the array, depending on the application. The device is organized as one block of 256 x 8-bit memory with a 2-wire serial interface. Low-voltage design permits operation down to 1.8V, with standby and active currents of only 1 μA and 1 mA, respectively. The 24XXX52 also has a page write capability for up to 16 bytes of data. The 24XXX52 is available in the standard 8-pin PDIP, surface mount SOIC, TSSOP, MSOP, DFN and TDFN packages.

Block Diagram

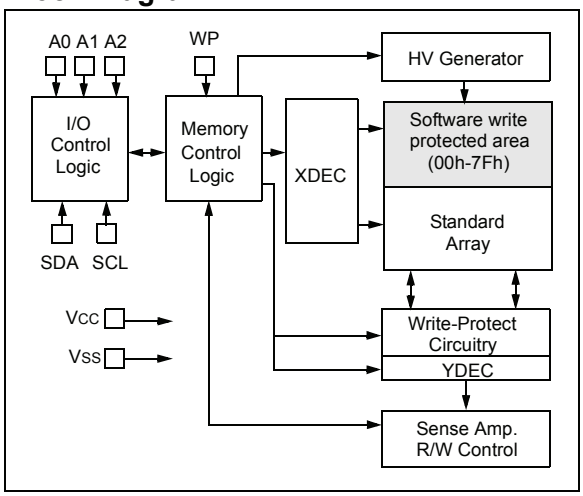

*24XXX52 is used in this document as a generic part number for the 24AA52/24LCS52 devices.

© 1996-2011 Microchip Technology Inc.

1.0 ELECTRICAL CHARACTERISTICS

Absolute Maximum Ratings(†)

VCC.....6.5V

All inputs and outputs w.r.t. VSS ..... -0.3V to VCC +1.0V

Storage temperature .....-65°C to +150°C

Ambient temperature with power applied .....-40°C to +125°C

ESD protection on all pins .....≥ 4 kV

† NOTICE: Stresses above those listed under “Absolute Maximum Ratings” may cause permanent damage to the device. These are stress ratings only and functional operation of the device at these or any other conditions above those indicated in the operation sections of the specifications is not implied. Exposure to Absolute Maximum Rating conditions for extended periods may affect device reliability.

TABLE 1-1: DC SPECIFICATIONS

DC CHARACTERISTICS			VCC = +1.8V to +5.5V Industrial (I): TA = -40°C to +85°C				
Param. No.	**Symbol**	**Characteristic**	**Min**	**Typ**	**Max**	**Units**	**Conditions**
D1	VIH	A0, A1, A2, SCL, SDA and WP pins	—	—	—	—	—
D2	—	High-level input voltage	0.7 VCC	—	—	V	—
D3	VIL	Low-level input voltage	—	—	0.3 VCC	V	0.2 VCC for VCC < 2.5V
D4	VHYS	Hysteresis of Schmitt Trigger inputs	0.05 VCC	—	—	V	**(Note)**
D5	VOL	Low-level output voltage	—	—	0.40	V	IOL = 3.0 mA, VCC = 2.5V
D6	ILI	Input leakage current	—	—	±1	µA	VIN = VSS or VCC
D7	ILO	Output leakage current	—	—	±1	µA	VOUT = VSS or VCC
D8	CIN, COUT	Pin capacitance (all inputs/outputs)	—	—	10	pF	VCC = 5.0V **(Note)** TA = 25°C, FCLK = 1 MHz
D9	ICC write	Operating current	—	1.0	3.0	mA	VCC = 5.5V, SCL = 400 kHz
D10	ICC read		—	0.20	1.0	mA	—
D11	ICCS	Standby current	— —	0.36 —	1.0 —	µA	Industrial SDA = SCL = VCC A0, A1, A2, WP = VSS

Note: This parameter is periodically sampled and not 100% tested.

© 1996-2011 Microchip Technology Inc.

TABLE 1-2: AC SPECIFICATIONS

AC CHARACTERISTICS			V_{CC} = +1.8V to +5.5V Industrial (I): T_A = -40°C to +85°C				
Param. No.	**Symbol**	**Characteristic**	**Min**	**Typ**	**Max**	**Units**	**Conditions**
1	F_{CLK}	Clock frequency	— —	— —	400 100	kHz	2.2V ≤ V_{CC} ≤ 5.5V 1.8V ≤ V_{CC} < 2.5V (24AA52)
2	T_{HIGH}	Clock high time	600 4000	— —	— —	ns	2.2V ≤ V_{CC} ≤ 5.5V 1.8V ≤ V_{CC} < 2.5V (24AA52)
3	T_{LOW}	Clock low time	1300 4700	— —	— —	ns	2.2V ≤ V_{CC} ≤ 5.5V 1.8V ≤ V_{CC} < 2.5V (24AA52)
4	T_R	SDA and SCL rise time **(Note 1)**	— —	— —	300 1000	ns	2.2V ≤ V_{CC} ≤ 5.5V 1.8V ≤ V_{CC} < 2.5V (24AA52)
5	T_F	SDA and SCL fall time	—	— —	300	ns	**(Note 1)**
6	$T_{HD:STA}$	Start condition hold time	600 4000	— —	— —	ns	2.2V ≤ V_{CC} ≤ 5.5V 1.8V ≤ V_{CC} < 2.5V (24AA52)
7	$T_{SU:STA}$	Start condition setup time	600 4700	— —	— —	ns	2.2V ≤ V_{CC} ≤ 5.5V 1.8V ≤ V_{CC} < 2.5V (24AA52)
8	$T_{HD:DAT}$	Data input hold time	0	— —	—	ns	**(Note 2)**
9	$T_{SU:DAT}$	Data input setup time	100 250	— —	— —	ns	2.2V ≤ V_{CC} ≤ 5.5V 1.8V ≤ V_{CC} < 2.5V (24AA52)
10	$T_{SU:STO}$	Stop condition setup time	600 4000	— —	— —	ns	2.2V ≤ V_{CC} ≤ 5.5V 1.8V ≤ V_{CC} < 2.5V (24AA52)
11	T_{AA}	Output valid from clock **(Note 2)**	— —	— —	900 3500	ns	2.2V ≤ V_{CC} ≤ 5.5V 1.8V ≤ V_{CC} < 2.5V (24AA52)
12	T_{BUF}	Bus free time: Time the bus must be free before a new transmission can start	1300 4700	— —	— —	ns	2.2V ≤ V_{CC} ≤ 5.5V 1.8V ≤ V_{CC} < 2.5V (24AA52)
13	T_{OF}	Output fall time from V_{IH} minimum to V_{IL} maximum	20 + 0.1 C_B —	— —	250 250	ns	2.2V ≤ V_{CC} ≤ 5.5V 1.8V ≤ V_{CC} < 2.5V (24AA52)
14	T_{SP}	Input filter spike suppression (SDA and SCL pins)	—	—	50	ns	**(Note 1 and Note 3)**
15	T_{WC}	Write cycle time (byte or page)	—	—	5	ms	—
16	—	Endurance	1M	—	—	cycles	25°C, V_{CC} = 5.0V **(Note 4)**

Note 1: Not 100% tested. C_B = total capacitance of one bus line in pF.

2: As a transmitter, the device must provide an internal minimum delay time to bridge the undefined region (minimum 300 ns) of the falling edge of SCL to avoid unintended generation of Start or Stop conditions.

3: The combined T_{SP} and V_{HYS} specifications are due to new Schmitt Trigger inputs, which provide improved noise spike suppression. This eliminates the need for a T_I specification for standard operation.

4: This parameter is not tested but ensured by characterization. For endurance estimates in a specific application, please consult the Total Endurance™ Model which can be obtained from Microchip's web site at www.microchip.com.

© 1996-2011 Microchip Technology Inc.

FIGURE 1-1: BUS TIMING DATA

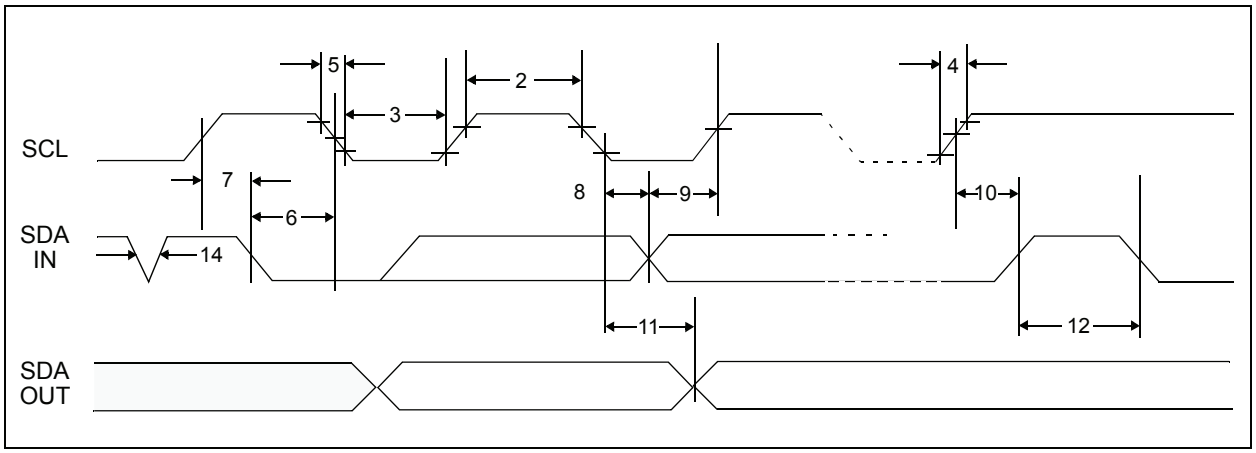

FIGURE 1-2: BUS TIMING START/STOP

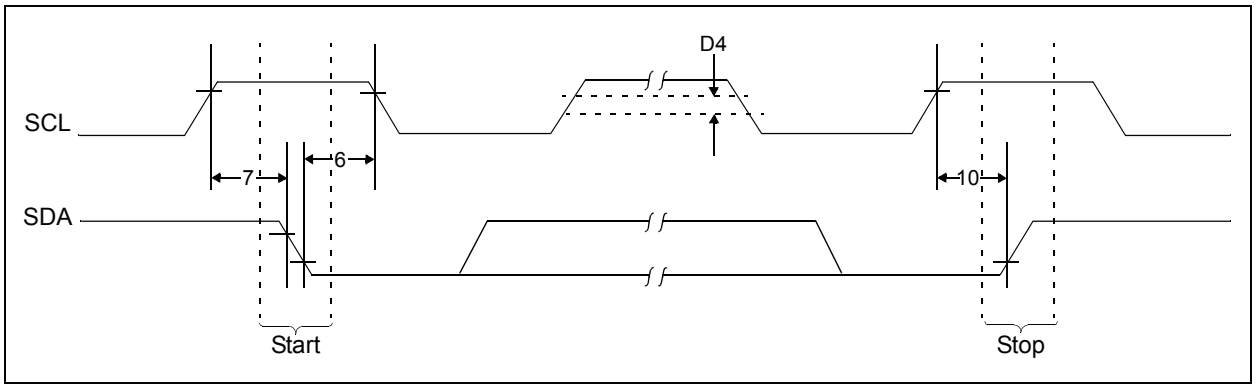

© 1996-2011 Microchip Technology Inc.

2.0 PIN DESCRIPTIONS

The descriptions of the pins are listed in Table 2-1.

TABLE 2-1: PIN FUNCTION TABLE

Symbol	PDIP	SOIC	TSSOP	MSOP	DFN(1)	TDFN(1)	Description
A0	1	1	1	1	1	1	Chip Address Input
A1	2	2	2	2	2	2	Chip Address Input
A2	3	3	3	3	3	3	Chip Address Input
VSS	4	4	4	4	4	4	Ground
SDA	5	5	5	5	5	5	Serial Address/Data I/O
SCL	6	6	6	6	6	6	Serial Clock
WP	7	7	7	7	7	7	Write-Protect Input
VCC	8	8	8	8	8	8	+1.8V to 5.5V Power Supply

Note 1: The exposed pad on the DFN/TDFN packages can be connected to VSS or left floating.

2.1 A0, A1, A2

The levels on these inputs are compared with the corresponding bits in the slave address. The chip is selected if the compare is true.

Up to eight 24XXX52 devices may be connected to the same bus by using different Chip Select bit combinations. These inputs must be connected to either VSS or VCC.

2.2 Serial Address/Data Input/Output (SDA)

This is a bidirectional pin used to transfer addresses and data into and data out of the device. It is an open drain terminal. Therefore, the SDA bus requires a pull-up resistor to VCC (typical 10 kΩ for 100 kHz, 2 kΩ for 400 kHz).

For normal data transfer, SDA is allowed to change only during SCL low. Changes during SCL high are reserved for indicating the Start and Stop conditions.

2.3 Serial Clock (SCL)

This input is used to synchronize the data transfer to and from the device.

2.4 Write-Protect (WP)

This is the hardware write-protect pin. It can be tied to VCC or VSS. If tied to VCC, the hardware write protection is enabled. If the WP pin is tied to VSS, the hardware write protection is disabled.

3.0 FUNCTIONAL DESCRIPTION

The 24XXX52 supports a bidirectional 2-wire bus and data transmission protocol. A device that sends data onto the bus is defined as a transmitter, and a device receiving data, as a receiver. The bus has to be controlled by a master device, which generates the Serial Clock (SCL), controls the bus access and generates the Start and Stop conditions, while the 24XXX52 works as slave. Both master and slave can operate as transmitter or receiver, but the master device determines which mode is activated.

4.0 BUS CHARACTERISTICS

The following **bus protocol** has been defined:

- Data transfer may be initiated only when the bus is not busy.
- During data transfer, the data line must remain stable whenever the clock line is high. Changes in the data line while the clock line is high will be interpreted as a Start or Stop condition.

Accordingly, the following bus conditions have been defined (Figure 4-1).

4.1 Bus Not Busy (A)

Both data and clock lines remain high.

4.2 Start Data Transfer (B)

A high-to-low transition of the SDA line while the clock (SCL) is high determines a Start condition. All commands must be preceded by a Start condition.

4.3 Stop Data Transfer (C)

A low-to-high transition of the SDA line while the clock (SCL) is high determines a Stop condition. All operations must be ended with a Stop condition.

4.4 Data Valid (D)

The state of the data line represents valid data when, after a Start condition, the data line is stable for the duration of the high period of the clock signal.

The data on the line must be changed during the low period of the clock signal. There is one clock pulse per bit of data.

Each data transfer is initiated with a Start condition and terminated with a Stop condition. The number of data bytes transferred between the Start and Stop conditions is determined by the master device and is, theoretically, unlimited; although only the last sixteen will be stored when doing a write operation. When an overwrite does occur, it will replace data in a first-in, first-out (FIFO) fashion.

4.5 Acknowledge

Each receiving device, when addressed, is obliged to generate an Acknowledge after the reception of each byte. The master device must generate an extra clock pulse, which is associated with this Acknowledge bit.

Note:	The 24XXX52 does not generate any Acknowledge bits if an internal programming cycle is in progress.

The device that acknowledges has to pull down the SDA line during the Acknowledge clock pulse in such a way that the SDA line is stable low during the high period of the acknowledge related clock pulse. Of course, setup and hold times must be taken into account. During reads, a master must signal an end-of-data to the slave by not generating an Acknowledge bit on the last byte that has been clocked out of the slave. In this case, the slave (24XXX52) will leave the data line high to enable the master to generate the Stop condition.

FIGURE 4-1: DATA TRANSFER SEQUENCE ON THE SERIAL BUS

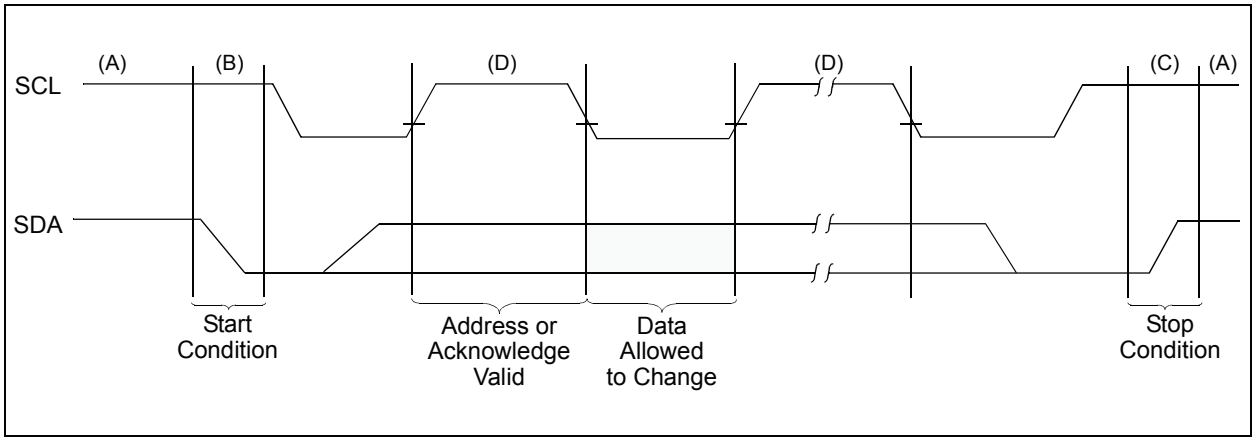

© 1996-2011 Microchip Technology Inc.

4.6 Device Addressing

A control byte is the first byte received following the Start condition from the master device. The first part of the control byte consists of a 4-bit control code which is set to '1010' for normal read and write operations and '0110' for writing to the write-protect register. The control byte is followed by three Chip Select bits (A2, A1, A0). The Chip Select bits allow the use of up to eight 24XXX52 devices on the same bus and are used to determine which device is accessed. The Chip Select bits in the control byte must correspond to the logic levels on the corresponding A2, A1 and A0 pins for the device to respond. The device will not acknowledge if you attempt a Read command with the control code set to '0110'.

The eighth bit of slave address determines if the master device wants to read or write to the 24XXX52 (Figure 4-2). When set to a one, a read operation is selected. When set to a zero, a write operation is selected.

Operation	Control Code	Chip Select	R/$\overline{W}$
Read	1010	A2 A1 A0	1
Write	1010	A2 A1 A0	0
Set Write-Protect Register	0110	A2 A1 A0	0

FIGURE 4-2: CONTROL BYTE ALLOCATION

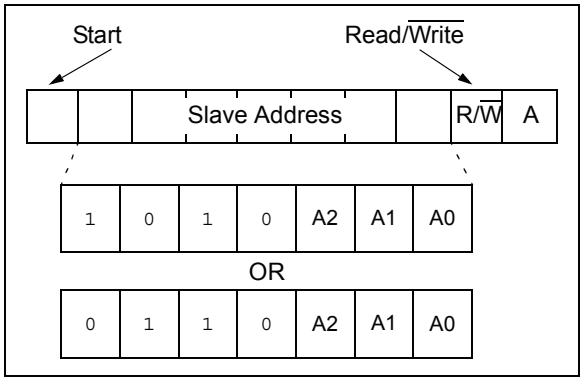

5.0 WRITE OPERATIONS

5.1 Byte Write

Following the Start signal from the master, the device code (4 bits), the Chip Select bits (3 bits) and the R/$\overline{W}$ bit, which is a logic low, are placed onto the bus by the master transmitter. This indicates to the addressed slave receiver that a byte with a word address will follow, once it has generated an Acknowledge bit during the ninth clock cycle. Therefore, the next byte transmitted by the master is the word address and will be written into the Address Pointer of the 24XXX52.

After receiving another Acknowledge signal from the 24XXX52, the master device will transmit the data word to be written into the addressed memory location. The 24XXX52 acknowledges again and the master generates a Stop condition. This initiates the internal write cycle, which means that during this time, the 24XXX52 will not generate Acknowledge signals (Figure 5-1). If an attempt is made to write to the array when the software or hardware write protection has been enabled, the device will acknowledge the command, but no data will be written. The write cycle time must be observed even if the write protection is enabled.

5.2 Page Write

The write control byte, word address and the first data byte are transmitted to the 24XXX52 in the same way as in a byte write. Instead of generating a Stop condition, the master transmits up to 15 additional data bytes to the 24XXX52, which are temporarily stored in the on-chip page buffer and will be written into the memory after the master has transmitted a Stop condition. Upon receipt of each word, the four lower order Address Pointer bits are internally incremented by one. The higher order four bits of the word address remain constant. If the master should transmit more than 16 bytes prior to generating the Stop condition, the address counter will roll over and the previously received data will be overwritten. As with the byte write operation, once the Stop condition is received, an internal write cycle will begin (Figure 5-2). If an attempt is made to write to the array when the hardware write protection has been enabled, the device will acknowledge the command, but no data will be written. The write cycle time must be observed even if the write protection is enabled.

Note: Page write operations are limited to writing bytes within a single physical page, regardless of the number of bytes actually being written. Physical page boundaries start at addresses that are integer multiples of the page buffer size (or 'page size') and end at addresses that are integer multiples of [page size – 1]. If a Page Write command attempts to write across a physical page boundary, the result is that the data wraps around to the beginning of the current page (overwriting data previously stored there), instead of being written to the next page, as might be expected. It is therefore necessary for the application software to prevent page write operations that would attempt to cross a page boundary.

FIGURE 5-1: BYTE WRITE

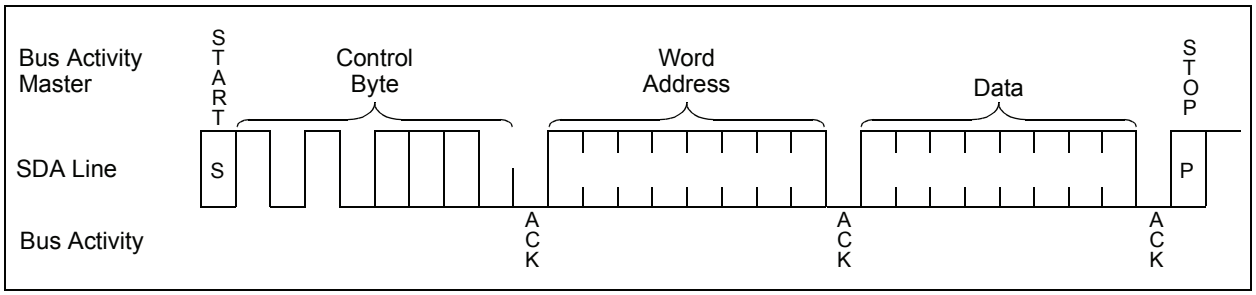

FIGURE 5-2: PAGE WRITE

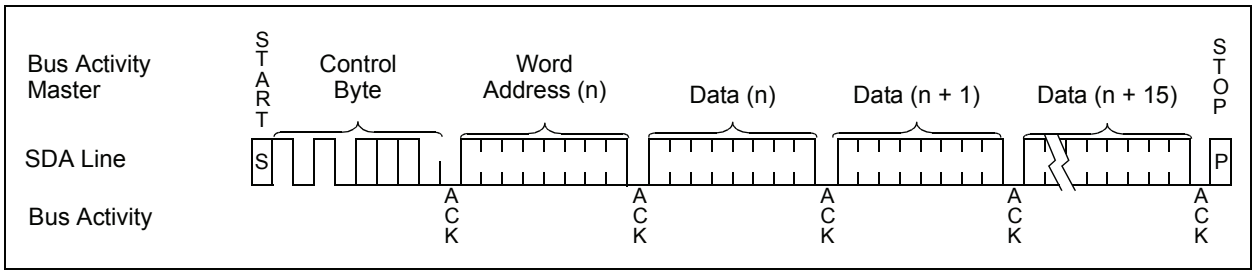

© 1996-2011 Microchip Technology Inc.

6.0 ACKNOWLEDGE POLLING

Since the device will not acknowledge during a write cycle, this can be used to determine when the cycle is complete (this feature can be used to maximize bus throughput). Once the Stop condition for a Write command has been issued from the master, the device initiates the internally timed write cycle. ACK polling can be initiated immediately. This involves the master sending a Start condition followed by the control byte for a Write command (R/$\overline{W}$ = 0). If the device is still busy with the write cycle, then no ACK will be returned. If the cycle is complete, then the device will return the ACK and the master can then proceed with the next Read or Write command. See Figure 6-1 for flow diagram.

FIGURE 6-1: ACKNOWLEDGE POLLING FLOW

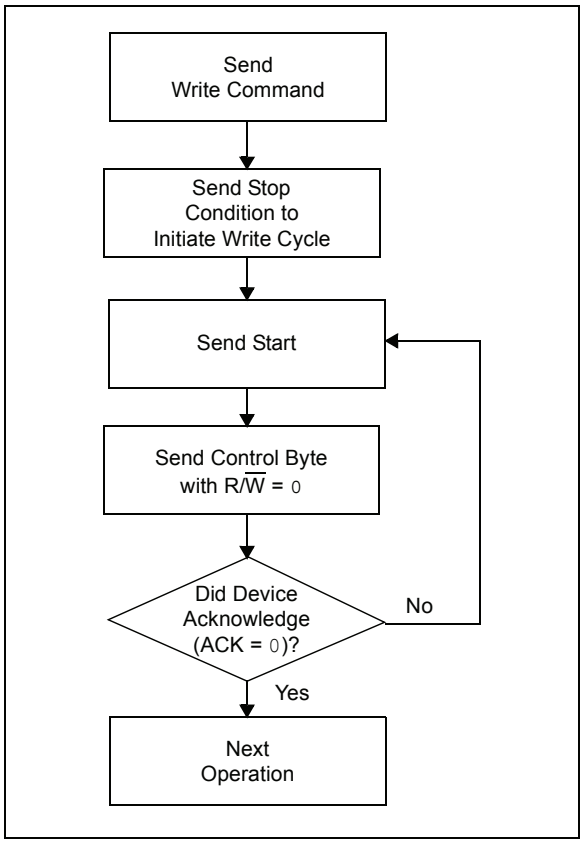

7.0 WRITE PROTECTION

The 24XXX52 has a software write-protect feature that allows the lower half of the array (addresses 00h-7Fh) to be permanently write-protected, as well as a WP pin that can be used to protect the entire array.

7.1 Software Write-Protect

The software write-protect feature is invoked by writing to the write-protect register. This is done by sending a command similar to a normal Write command. As shown in Figure 7-1, the write-protect register is written by sending a Write command with the slave address set to '0110' instead of '1010' and the address bits and data bits are "don't cares." Once the software write-protect register has been written, the device will not acknowledge the '0110' control byte.

FIGURE 7-1: SETTING WRITE-PROTECT REGISTER

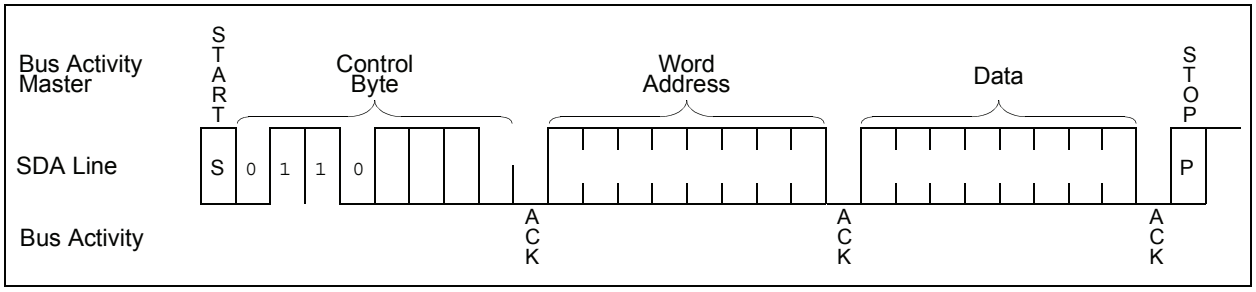

7.2 Resetting the Software Write-Protect Fuse

It is possible to reset the software write-protect feature on the 24XXX52. This is done by sending a command similar to setting the software write-protect command, except the command is sent before the regular control byte and is '1001'. The full command will be shown in Figure 7-2. In order for the command to work, a voltage of Vcc + 5.5V must be applied to the WP pin and must be sustained for 1μS before the command is given. The customer should also allow for a 5 ms delay after the Stop bit for TWC.

© 1996-2011 Microchip Technology Inc.

FIGURE 7-2: RESETTING WRITE-PROTECT FUSE (RWPF)

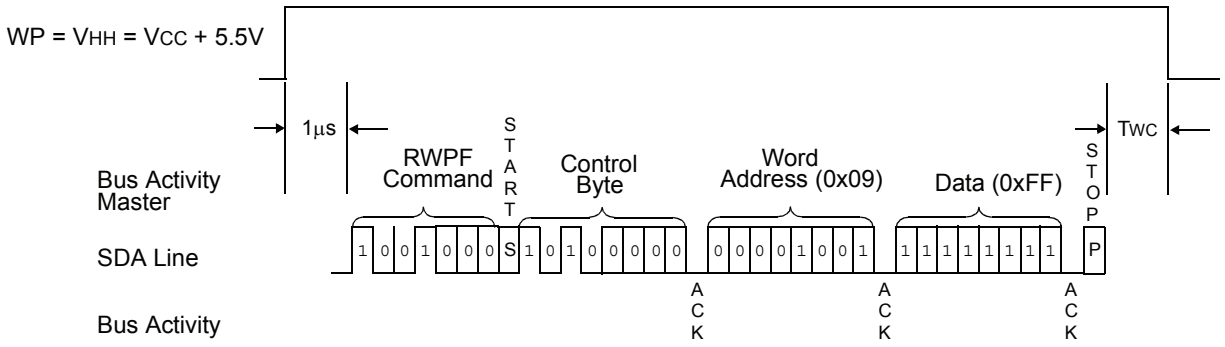

Note: Clock = 100 kHz, VDD = 1.8V to 5.5V

7.3 Hardware Write-Protect

The WP pin can be tied to VCC or VSS. If tied to VCC, the entire array will be write-protected, regardless of whether the software write-protect register has been written or not. If the WP pin is set to VCC, it will prevent the software write-protect register from being written. If the WP is tied to VSS, write protection is determined by the status of the software write-protect register for addresses 00h-7Fh. Addresses 80h-FFh are solely protected by the WP pin level.

8.0 READ OPERATION

Read operations are initiated in the same way as write operations, with the exception that the R/$\overline{W}$ bit of the slave address is set to '1'. There are three basic types of read operations: current address read, random read and sequential read.

8.1 Current Address Read

The 24XXX52 contains an address counter that maintains the address of the last word accessed, internally incremented by '1'. Therefore, if the previous access (either a read or write operation) was to address n, the next current address read operation would access data from address n+1. Upon receipt of the slave address with R/$\overline{W}$ bit set to '1', the 24XXX52 issues an acknowledge and transmits the 8-bit data word. The master will not acknowledge the transfer, but does generate a Stop condition and the 24XXX52 discontinues transmission (Figure 8-1).

8.2 Random Read

Random read operations allow the master to access any memory location in a random manner. To perform this type of read operation, the word address must first be set. This is done by sending the word address to the 24XXX52 as part of a write operation. Once the word address is sent, the master generates a Start condition following the acknowledge. This terminates the write operation, but not before the internal Address Pointer is set. The master then issues the control byte again, but with the R/$\overline{W}$ bit set to a '1'. The 24XXX52 then issues an acknowledge and transmits the 8-bit data word. The master will not acknowledge the transfer, but does generate a Stop condition and the 24XXX52 discontinues transmission (Figure 8-2).

8.3 Sequential Read

Sequential reads are initiated in the same way as a random read, with the exception that after the 24XXX52 transmits the first data byte, the master issues an acknowledge, as opposed to a Stop condition in a random read. This directs the 24XXX52 to transmit the next sequentially addressed 8-bit word (Figure 8-3).

To provide sequential reads, the 24XXX52 contains an internal Address Pointer, which is incremented by one at the completion of each operation. This Address Pointer allows the entire memory contents to be serially read during one operation.

8.4 Contiguous Addressing Across Multiple Devices

The Chip Select bits (A2, A1, A0) can be used to expand the contiguous address space for up to 16K bits by adding up to eight 24XXX52 devices on the same bus. In this case, software can use A0 of the control byte as address bit A8; A1 as address bit A9, and A2 as address bit A10. It is not possible to sequentially read across device boundaries.

8.5 Noise Protection and Brown-Out

The 24XXX52 employs a VCC threshold detector circuit which disables the internal erase/write logic if the VCC is below 1.5V at nominal conditions.

The SCL and SDA inputs have Schmitt Trigger and filter circuits which suppress noise spikes to assure proper device operation, even on a noisy bus.

FIGURE 8-1: CURRENT ADDRESS READ

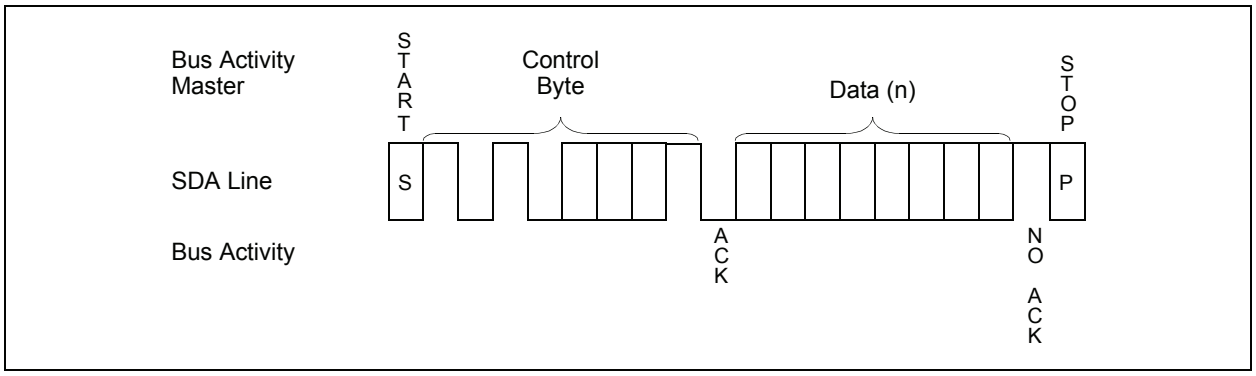

© 1996-2011 Microchip Technology Inc.

FIGURE 8-2: RANDOM READ

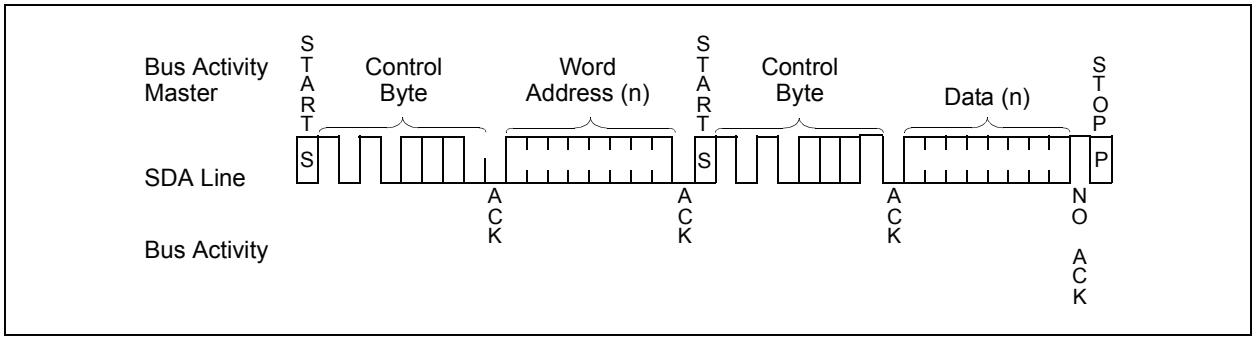

FIGURE 8-3: SEQUENTIAL READ

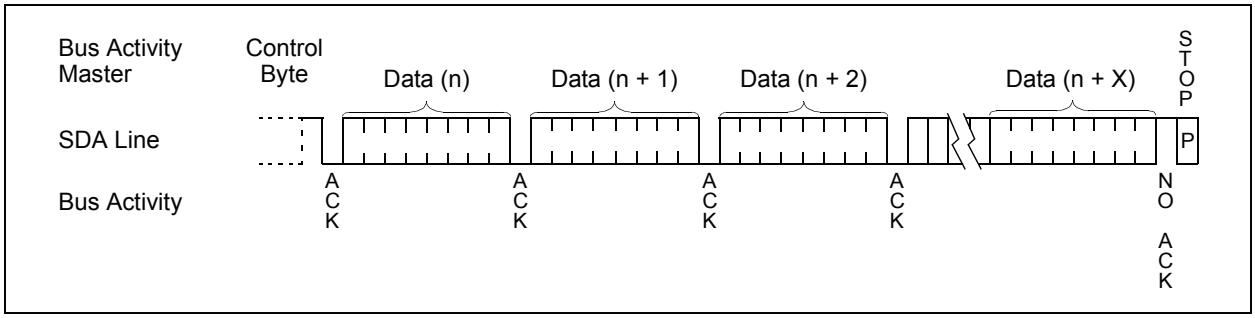

9.0 PACKAGING INFORMATION

9.1 Package Marking Information

8-Lead PDIP (300 mil)

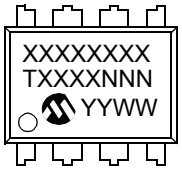

Example:

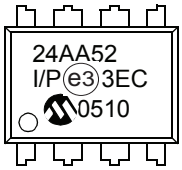

8-Lead SOIC (150 mil)

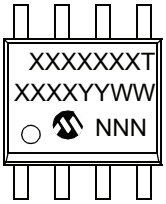

Example:

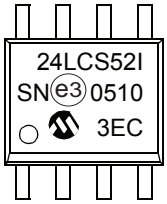

8-Lead TSSOP

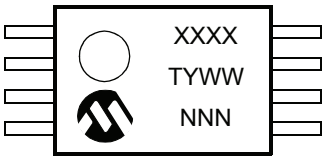

Example:

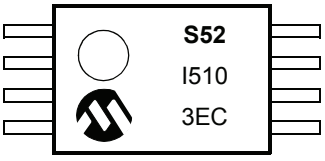

8-Lead MSOP

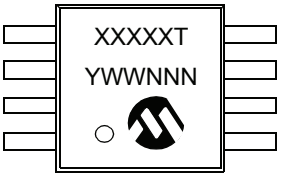

Example:

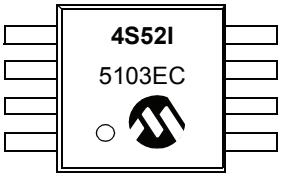

8-Lead 2x3 DFN



Example:

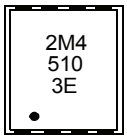

8-Lead 2x3 TDFN



Example:

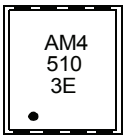

© 1996-2011 Microchip Technology Inc.

Part Number	1st Line Marking Codes			
	TSSOP	MSOP	DFN	TDFN
24AA52	A52	4A52I	2M1	AM1
24LCS52	S52	4S52I	2M4	AM4

Legend:	XX...X	Part number or part number code
	T	Temperature (I, E)
	Y	Year code (last digit of calendar year)
	YY	Year code (last 2 digits of calendar year)
	WW	Week code (week of January 1 is week '01')
	NNN	Alphanumeric traceability code (2 characters for small packages)
	(e3)	Pb-free JEDEC designator for Matte Tin (Sn)

Note: For very small packages with no room for the Pb-free JEDEC designator (e3), the marking will only appear on the outer carton or reel label.

Note: In the event the full Microchip part number cannot be marked on one line, it will be carried over to the next line, thus limiting the number of available characters for customer-specific information.

Note: Please visit www.microchip.com/Pbfree for the latest information on Pb-free conversion.

*Standard OTP marking consists of Microchip part number, year code, week code, and traceability code.

8-Lead Plastic Dual In-Line (P) – 300 mil Body [PDIP]

Note: For the most current package drawings, please see the Microchip Packaging Specification located at http://www.microchip.com/packaging

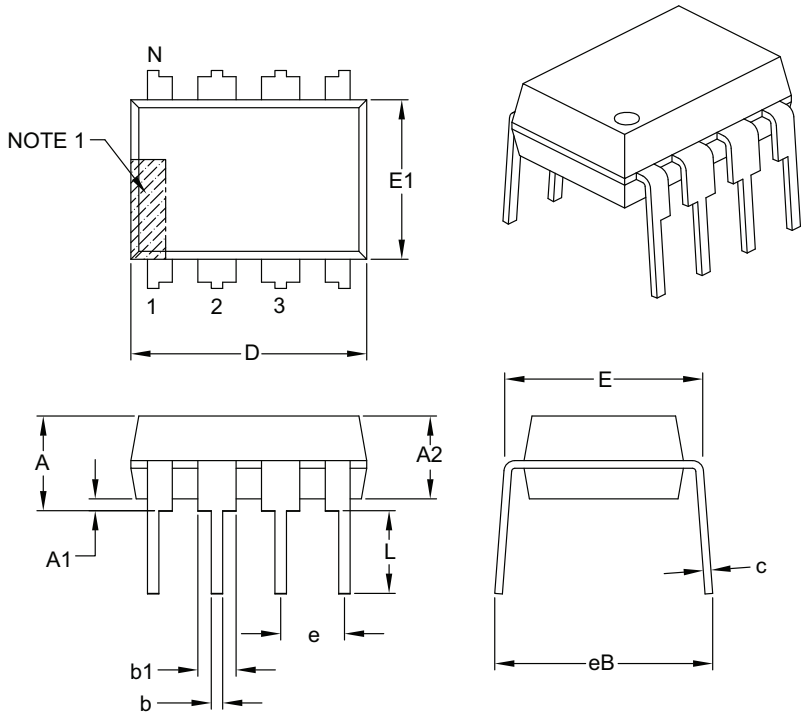

Units		INCHES		
Dimension Limits		MIN	NOM	MAX
Number of Pins	N		8	
Pitch	e		.100 BSC	
Top to Seating Plane	A	–	–	.210
Molded Package Thickness	A2	.115	.130	.195
Base to Seating Plane	A1	.015	–	–
Shoulder to Shoulder Width	E	.290	.310	.325
Molded Package Width	E1	.240	.250	.280
Overall Length	D	.348	.365	.400
Tip to Seating Plane	L	.115	.130	.150
Lead Thickness	c	.008	.010	.015
Upper Lead Width	b1	.040	.060	.070
Lower Lead Width	b	.014	.018	.022
Overall Row Spacing §	eB	–	–	.430

Notes:

1. Pin 1 visual index feature may vary, but must be located with the hatched area.
2. § Significant Characteristic.
3. Dimensions D and E1 do not include mold flash or protrusions. Mold flash or protrusions shall not exceed .010" per side.
4. Dimensioning and tolerancing per ASME Y14.5M.

   BSC: Basic Dimension. Theoretically exact value shown without tolerances.

Microchip Technology Drawing C04-018B

© 1996-2011 Microchip Technology Inc.

8-Lead Plastic Small Outline (SN) - Narrow, 3.90 mm Body [SOIC]

Note: For the most current package drawings, please see the Microchip Packaging Specification located at http://www.microchip.com/packaging

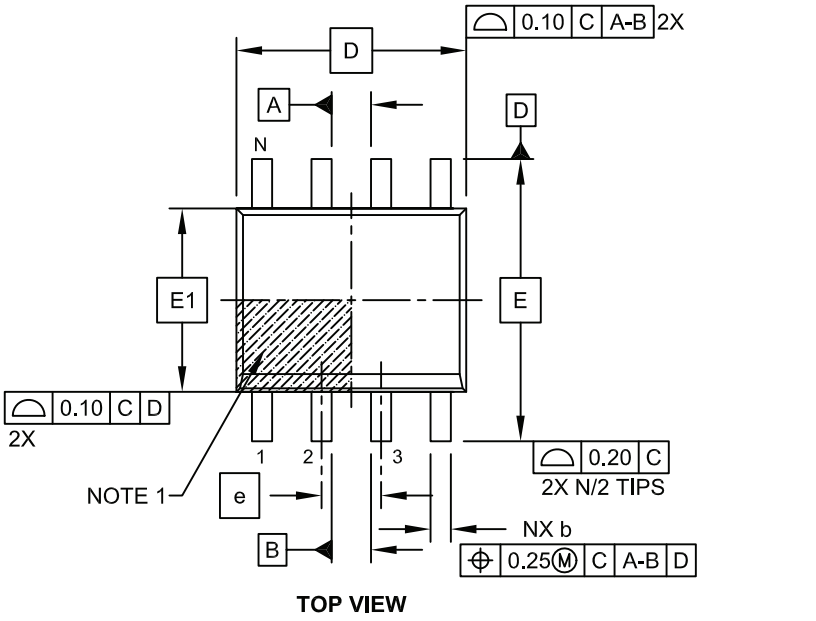

TOP VIEW

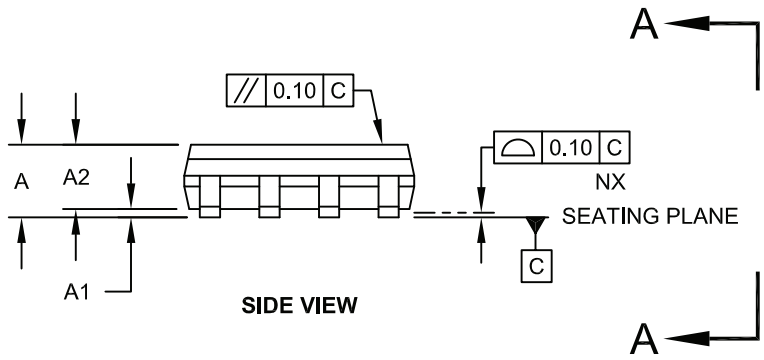

SIDE VIEW

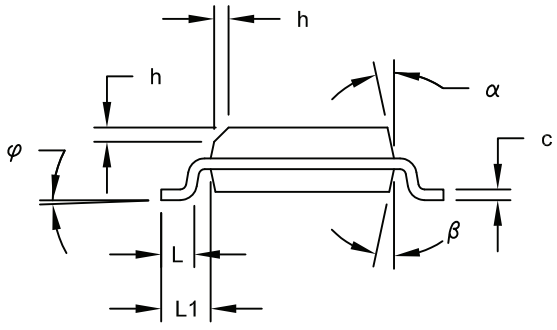

VIEW A-A

Microchip Technology Drawing No. C04-057C Sheet 1 of 2

8-Lead Plastic Small Outline (SN) - Narrow, 3.90 mm Body [SOIC]

Note: For the most current package drawings, please see the Microchip Packaging Specification located at http://www.microchip.com/packaging

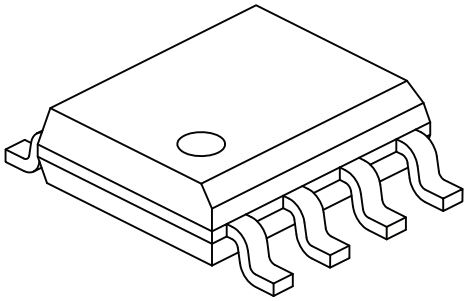

Units		MILLIMETERS		
Dimension Limits		MIN	NOM	MAX
Number of Pins	N		8	
Pitch	e		1.27 BSC	
Overall Height	A	-	-	1.75
Molded Package Thickness	A2	1.25	-	-
Standoff §	A1	0.10	-	0.25
Overall Width	E		6.00 BSC	
Molded Package Width	E1		3.90 BSC	
Overall Length	D		4.90 BSC	
Chamfer (Optional)	h	0.25	-	0.50
Foot Length	L	0.40	-	1.27
Footprint	L1		1.04 REF	
Foot Angle	φ	0°	-	8°
Lead Thickness	c	0.17	-	0.25
Lead Width	b	0.31	-	0.51
Mold Draft Angle Top	α	5°	-	15°
Mold Draft Angle Bottom	β	5°	-	15°

Notes:

1. Pin 1 visual index feature may vary, but must be located within the hatched area.
2. § Significant Characteristic
3. Dimensions D and E1 do not include mold flash or protrusions. Mold flash or protrusions shall not exceed 0.15mm per side.
4. Dimensioning and tolerancing per ASME Y14.5M

BSC: Basic Dimension. Theoretically exact value shown without tolerances.
REF: Reference Dimension, usually without tolerance, for information purposes only.

Microchip Technology Drawing No. C04-057C Sheet 2 of 2

© 1996-2011 Microchip Technology Inc.

8-Lead Plastic Small Outline (SN) – Narrow, 3.90 mm Body [SOIC]

Note: For the most current package drawings, please see the Microchip Packaging Specification located at http://www.microchip.com/packaging

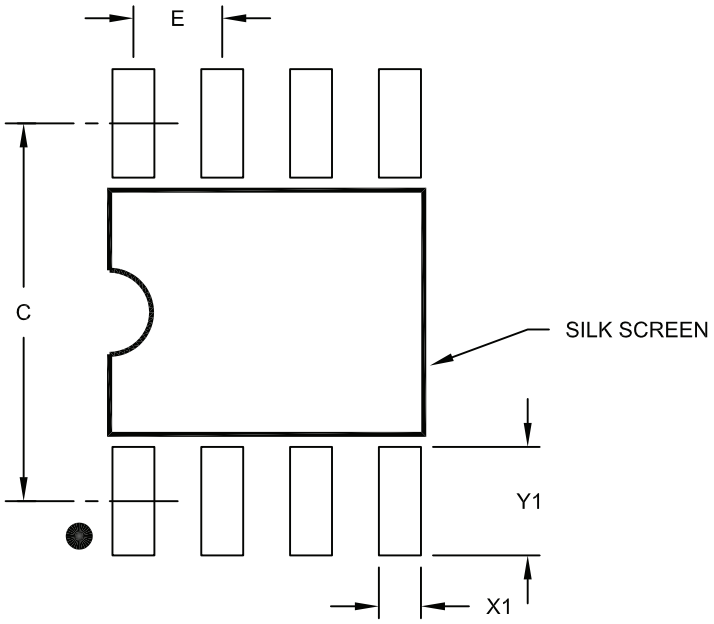

RECOMMENDED LAND PATTERN

Units		MILLIMETERS		
Dimension Limits		MIN	NOM	MAX
Contact Pitch	E		1.27 BSC	
Contact Pad Spacing	C		5.40	
Contact Pad Width (X8)	X1			0.60
Contact Pad Length (X8)	Y1			1.55

Notes:

1. Dimensioning and tolerancing per ASME Y14.5M

BSC: Basic Dimension. Theoretically exact value shown without tolerances.

Microchip Technology Drawing No. C04-2057A

8-Lead Plastic Thin Shrink Small Outline (ST) – 4.4 mm Body [TSSOP]

Note: For the most current package drawings, please see the Microchip Packaging Specification located at http://www.microchip.com/packaging

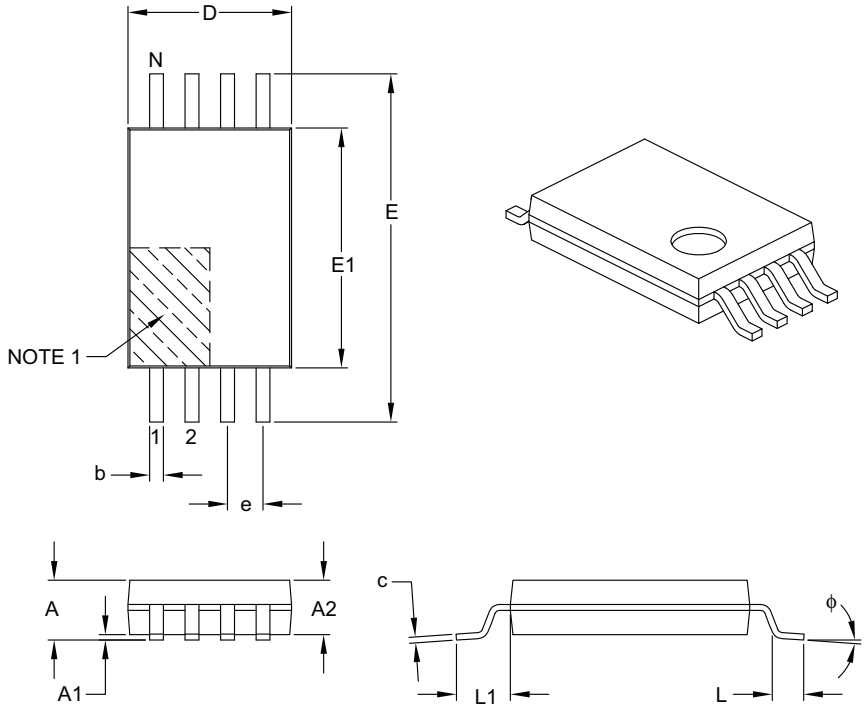

Units		MILLIMETERS		
Dimension Limits		MIN	NOM	MAX
Number of Pins	N		8	
Pitch	e		0.65 BSC	
Overall Height	A	–	–	1.20
Molded Package Thickness	A2	0.80	1.00	1.05
Standoff	A1	0.05	–	0.15
Overall Width	E		6.40 BSC	
Molded Package Width	E1	4.30	4.40	4.50
Molded Package Length	D	2.90	3.00	3.10
Foot Length	L	0.45	0.60	0.75
Footprint	L1		1.00 REF	
Foot Angle	ϕ	0°	–	8°
Lead Thickness	c	0.09	–	0.20
Lead Width	b	0.19	–	0.30

Notes:

1. Pin 1 visual index feature may vary, but must be located within the hatched area.
2. Dimensions D and E1 do not include mold flash or protrusions. Mold flash or protrusions shall not exceed 0.15 mm per side.
3. Dimensioning and tolerancing per ASME Y14.5M.

BSC: Basic Dimension. Theoretically exact value shown without tolerances.
REF: Reference Dimension, usually without tolerance, for information purposes only.

Microchip Technology Drawing C04-086B

© 1996-2011 Microchip Technology Inc.

8-Lead Plastic Thin Shrink Small Outline (ST) - 4.4 mm Body [TSSOP]

Note: For the most current package drawings, please see the Microchip Packaging Specification located at http://www.microchip.com/packaging

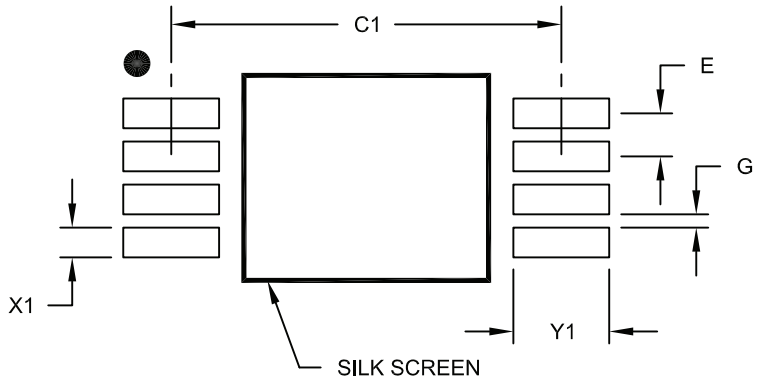

RECOMMENDED LAND PATTERN

Units		MILLIMETERS		
Dimension Limits		MIN	NOM	MAX
Contact Pitch	E		0.65 BSC	
Contact Pad Spacing	C1		5.90	
Contact Pad Width (X8)	X1			0.45
Contact Pad Length (X8)	Y1			1.45
Distance Between Pads	G	0.20		

Notes:

1. Dimensioning and tolerancing per ASME Y14.5M

BSC: Basic Dimension. Theoretically exact value shown without tolerances.

Microchip Technology Drawing No. C04-2086A

© 1996-2011 Microchip Technology Inc.

8-Lead Plastic Micro Small Outline Package (MS) [MSOP]

Note: For the most current package drawings, please see the Microchip Packaging Specification located at http://www.microchip.com/packaging

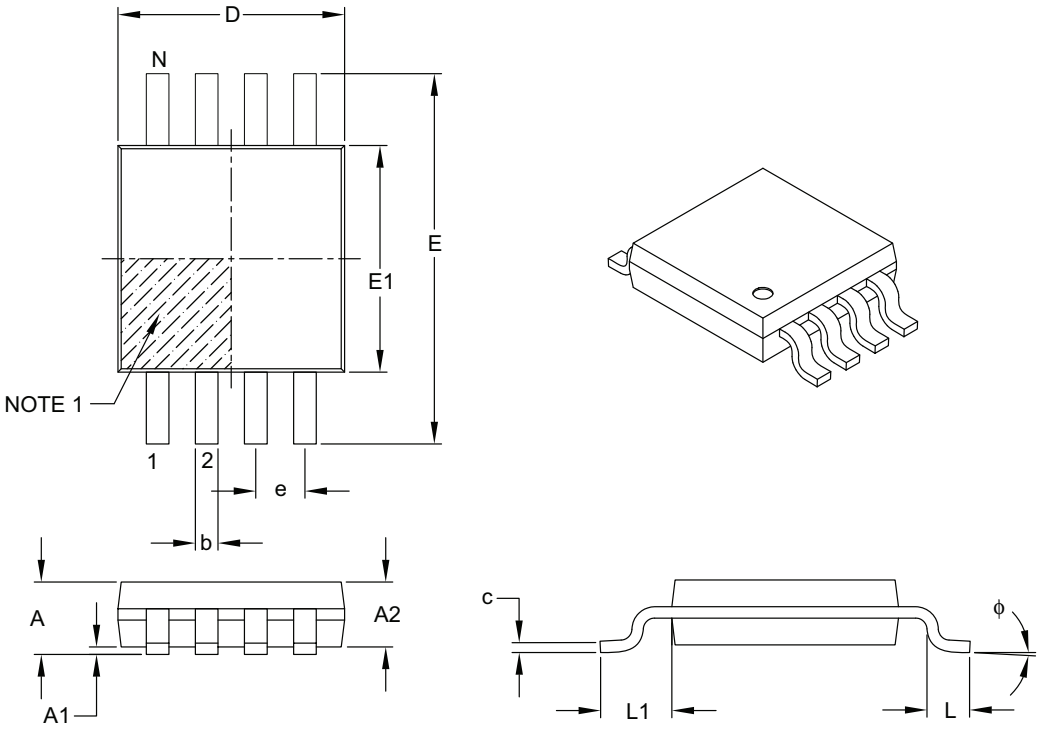

Units		MILLIMETERS		
Dimension Limits		MIN	NOM	MAX
Number of Pins	N		8	
Pitch	e		0.65 BSC	
Overall Height	A	–	–	1.10
Molded Package Thickness	A2	0.75	0.85	0.95
Standoff	A1	0.00	–	0.15
Overall Width	E		4.90 BSC	
Molded Package Width	E1		3.00 BSC	
Overall Length	D		3.00 BSC	
Foot Length	L	0.40	0.60	0.80
Footprint	L1		0.95 REF	
Foot Angle	ϕ	0°	–	8°
Lead Thickness	c	0.08	–	0.23
Lead Width	b	0.22	–	0.40

Notes:

1. Pin 1 visual index feature may vary, but must be located within the hatched area.
2. Dimensions D and E1 do not include mold flash or protrusions. Mold flash or protrusions shall not exceed 0.15 mm per side.
3. Dimensioning and tolerancing per ASME Y14.5M.

BSC: Basic Dimension. Theoretically exact value shown without tolerances.

REF: Reference Dimension, usually without tolerance, for information purposes only.

Microchip Technology Drawing C04-111B

© 1996-2011 Microchip Technology Inc.

8-Lead Plastic Micro Small Outline Package (MS) [MSOP]

Note: For the most current package drawings, please see the Microchip Packaging Specification located at http://www.microchip.com/packaging

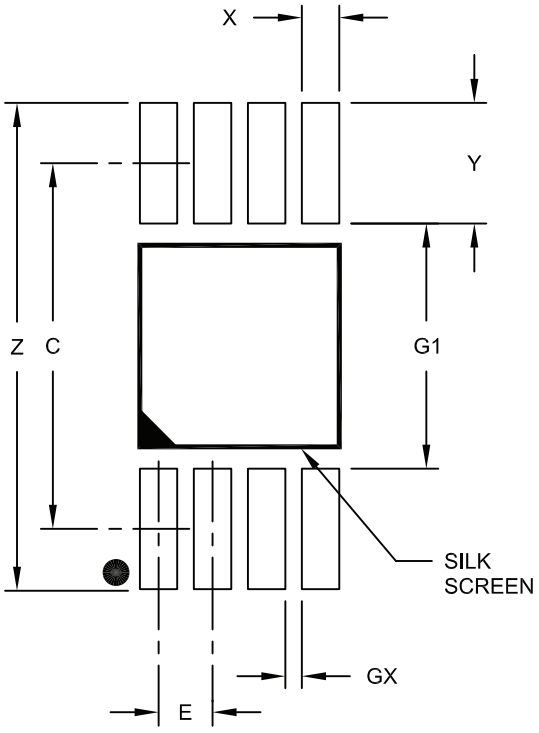

RECOMMENDED LAND PATTERN

Units		MILLIMETERS		
Dimension Limits		MIN	NOM	MAX
Contact Pitch	E	0.65 BSC		
Contact Pad Spacing	C		4.40	
Overall Width	Z			5.85
Contact Pad Width (X8)	X1			0.45
Contact Pad Length (X8)	Y1			1.45
Distance Between Pads	G1	2.95		
Distance Between Pads	GX	0.20		

Notes:

1. Dimensioning and tolerancing per ASME Y14.5M

BSC: Basic Dimension. Theoretically exact value shown without tolerances.

Microchip Technology Drawing No. C04-2111A

8-Lead Plastic Dual Flat, No Lead Package (MC) – 2x3x0.9 mm Body [DFN]

Note: For the most current package drawings, please see the Microchip Packaging Specification located at http://www.microchip.com/packaging

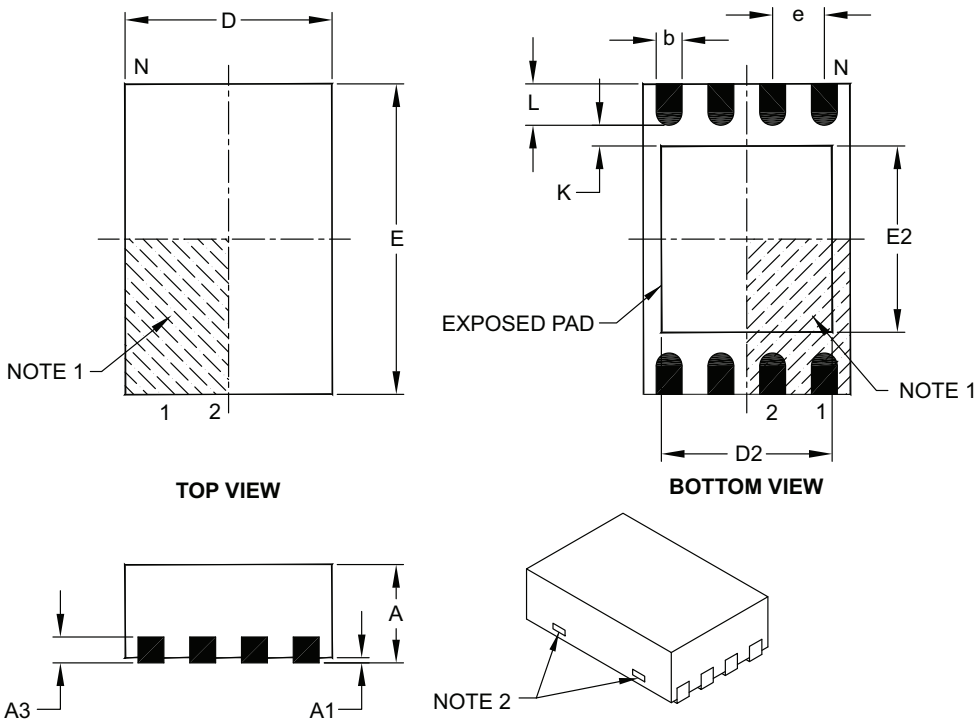

Units		MILLIMETERS		
Dimension Limits		MIN	NOM	MAX
Number of Pins	N		8	
Pitch	e		0.50 BSC	
Overall Height	A	0.80	0.90	1.00
Standoff	A1	0.00	0.02	0.05
Contact Thickness	A3		0.20 REF	
Overall Length	D		2.00 BSC	
Overall Width	E		3.00 BSC	
Exposed Pad Length	D2	1.30	–	1.55
Exposed Pad Width	E2	1.50	–	1.75
Contact Width	b	0.20	0.25	0.30
Contact Length	L	0.30	0.40	0.50
Contact-to-Exposed Pad	K	0.20	–	–

Notes:

1. Pin 1 visual index feature may vary, but must be located within the hatched area.
2. Package may have one or more exposed tie bars at ends.
3. Package is saw singulated.
4. Dimensioning and tolerancing per ASME Y14.5M.

BSC: Basic Dimension. Theoretically exact value shown without tolerances.

REF: Reference Dimension, usually without tolerance, for information purposes only.

Microchip Technology Drawing C04-123C

© 1996-2011 Microchip Technology Inc.

8-Lead Plastic Dual Flat, No Lead Package (MC) - 2x3x0.9mm Body [DFN]

Note: For the most current package drawings, please see the Microchip Packaging Specification located at http://www.microchip.com/packaging

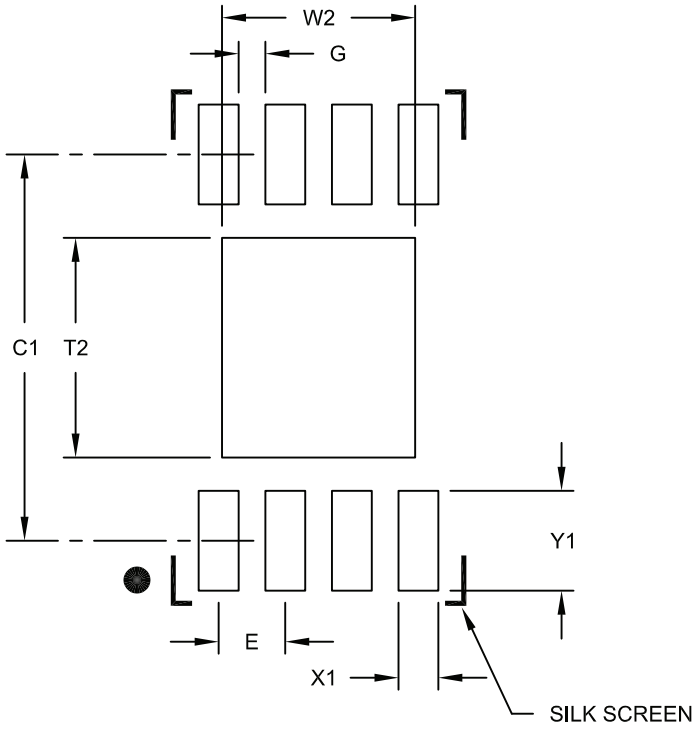

RECOMMENDED LAND PATTERN

Units		MILLIMETERS		
Dimension Limits		MIN	NOM	MAX
Contact Pitch	E	0.50 BSC		
Optional Center Pad Width	W2			1.45
Optional Center Pad Length	T2			1.75
Contact Pad Spacing	C1		2.90	
Contact Pad Width (X8)	X1			0.30
Contact Pad Length (X8)	Y1			0.75
Distance Between Pads	G	0.20		

Notes:

1. Dimensioning and tolerancing per ASME Y14.5M

BSC: Basic Dimension. Theoretically exact value shown without tolerances.

Microchip Technology Drawing No. C04-2123B

8-Lead Plastic Dual Flat, No Lead Package (MN) – 2x3x0.75mm Body [TDFN]

Note: For the most current package drawings, please see the Microchip Packaging Specification located at http://www.microchip.com/packaging

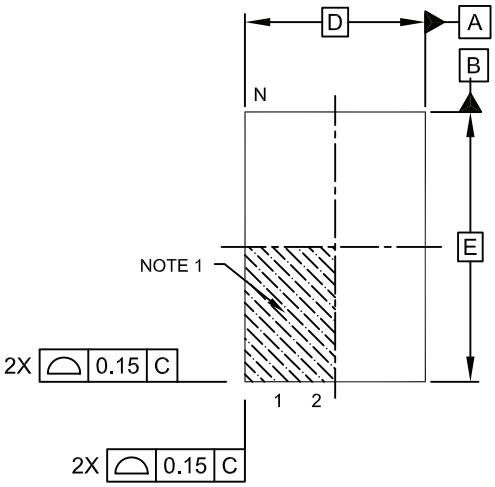

TOP VIEW

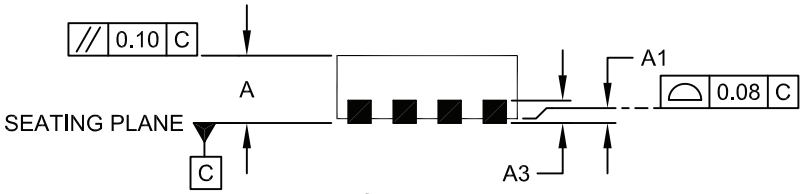

SIDE VIEW

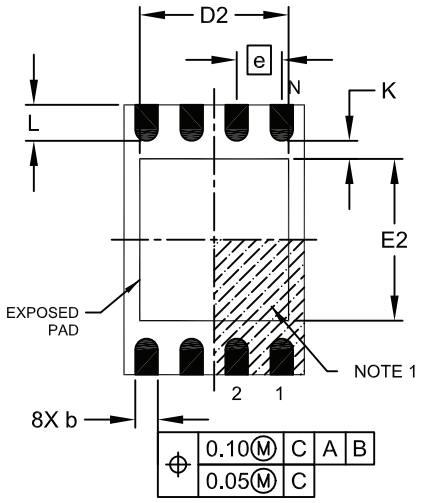

BOTTOM VIEW

Microchip Technology Drawing No. C04-129C Sheet 1 of 2

© 1996-2011 Microchip Technology Inc.

8-Lead Plastic Dual Flat, No Lead Package (MN) – 2x3x0.75mm Body [TDFN]

Note: For the most current package drawings, please see the Microchip Packaging Specification located at http://www.microchip.com/packaging

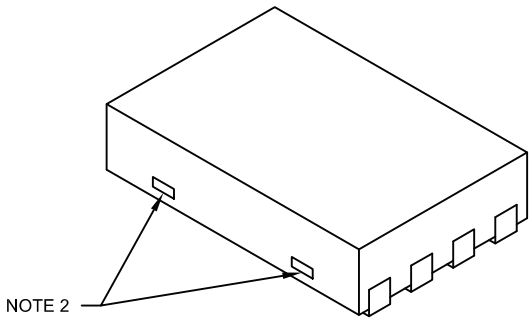

Units		MILLIMETERS		
Dimension Limits		MIN	NOM	MAX
Number of Pins	N		8	
Pitch	e		0.50 BSC	
Overall Height	A	0.70	0.75	0.80
Standoff	A1	0.00	0.02	0.05
Contact Thickness	A3		0.20 REF	
Overall Length	D		2.00 BSC	
Overall Width	E		3.00 BSC	
Exposed Pad Length	D2	1.20	-	1.60
Exposed Pad Width	E2	1.20	-	1.60
Contact Width	b	0.20	0.25	0.30
Contact Length	L	0.25	0.30	0.45
Contact-to-Exposed Pad	K	0.20	-	-

Notes:

1. Pin 1 visual index feature may vary, but must be located within the hatched area.
2. Package may have one or more exposed tie bars at ends.
3. Package is saw singulated
4. Dimensioning and tolerancing per ASME Y14.5M

BSC: Basic Dimension. Theoretically exact value shown without tolerances.

REF: Reference Dimension, usually without tolerance, for information purposes only.

Microchip Technology Drawing No. C04-129C Sheet 2 of 2

8-Lead Plastic Dual Flat, No Lead Package (MN) – 2x3x0.75 mm Body [TDFN]

Note: For the most current package drawings, please see the Microchip Packaging Specification located at http://www.microchip.com/packaging

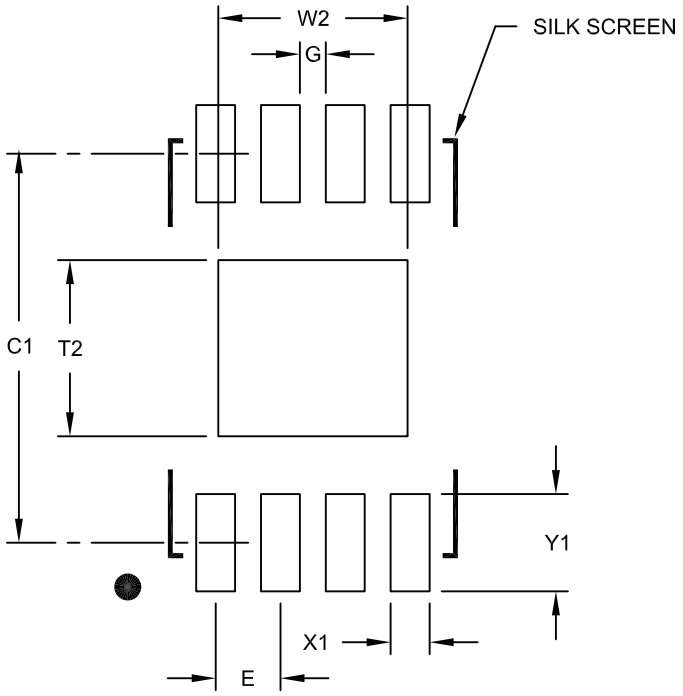

RECOMMENDED LAND PATTERN

Units		MILLIMETERS		
Dimension Limits		MIN	NOM	MAX
Contact Pitch	E		0.50 BSC	
Optional Center Pad Width	W2			1.46
Optional Center Pad Length	T2			1.36
Contact Pad Spacing	C1		3.00	
Contact Pad Width (X8)	X1			0.30
Contact Pad Length (X8)	Y1			0.75
Distance Between Pads	G	0.20		

Notes:

1. Dimensioning and tolerancing per ASME Y14.5M

BSC: Basic Dimension. Theoretically exact value shown without tolerances.

Microchip Technology Drawing No. C04-2129A

© 1996-2011 Microchip Technology Inc.

APPENDIX A: REVISION HISTORY

Revision G

Added 2.2V to document; Revised Features section to include Standard and Pb-free finishes.
Corrections to Section 1.0, Electrical Characteristics; Product ID System, added lead finish info.

Revision H

Added Reset Software Write-Protect feature.
Added 2x3 DFN package option.

Revision J

Revised Sections 6.3 and 8.4. Revised DFN Package Drawing.

Revision K (11/2011)

Added TDFN package.

NOTES:

© 1996-2011 Microchip Technology Inc.

THE MICROCHIP WEB SITE

Microchip provides online support via our WWW site at www.microchip.com. This web site is used as a means to make files and information easily available to customers. Accessible by using your favorite Internet browser, the web site contains the following information:

- **Product Support** – Data sheets and errata, application notes and sample programs, design resources, user's guides and hardware support documents, latest software releases and archived software
- **General Technical Support** – Frequently Asked Questions (FAQ), technical support requests, online discussion groups, Microchip consultant program member listing
- **Business of Microchip** – Product selector and ordering guides, latest Microchip press releases, listing of seminars and events, listings of Microchip sales offices, distributors and factory representatives

CUSTOMER CHANGE NOTIFICATION SERVICE

Microchip's customer notification service helps keep customers current on Microchip products. Subscribers will receive e-mail notification whenever there are changes, updates, revisions or errata related to a specified product family or development tool of interest.

To register, access the Microchip web site at www.microchip.com. Under "Support", click on "Customer Change Notification" and follow the registration instructions.

CUSTOMER SUPPORT

Users of Microchip products can receive assistance through several channels:

- Distributor or Representative
- Local Sales Office
- Field Application Engineer (FAE)
- Technical Support
- Development Systems Information Line

Customers should contact their distributor, representative or field application engineer (FAE) for support. Local sales offices are also available to help customers. A listing of sales offices and locations is included in the back of this document.

Technical support is available through the web site at: http://microchip.com/support

READER RESPONSE

It is our intention to provide you with the best documentation possible to ensure successful use of your Microchip product. If you wish to provide your comments on organization, clarity, subject matter, and ways in which our documentation can better serve you, please FAX your comments to the Technical Publications Manager at (480) 792-4150.

Please list the following information, and use this outline to provide us with your comments about this document.

TO: Technical Publications Manager Total Pages Sent _____

RE: Reader Response

From: Name _____

Company _____

Address _____

City / State / ZIP / Country _____

Telephone: (_____) _____ - _____ FAX: (_____) _____ - _____

Application (optional):

Would you like a reply? ___Y ___N

Device: 24AA52/24LCS52 Literature Number: DS21166K

Questions:

1. What are the best features of this document?

2. How does this document meet your hardware and software development needs?

3. Do you find the organization of this document easy to follow? If not, why?

4. What additions to the document do you think would enhance the structure and subject?

5. What deletions from the document could be made without affecting the overall usefulness?

6. Is there any incorrect or misleading information (what and where)?

7. How would you improve this document?

© 1996-2011 Microchip Technology Inc.

PRODUCT IDENTIFICATION SYSTEM

To order or obtain information, e.g., on pricing or delivery, refer to the factory or the listed sales office.

PART NO.	X	/XX	X
Device	Temperature Range	Package	Lead Finish

Device:	24AA52:	=	1.8V, 2 Kbit I^2C Serial EEPROM
	24AA52T:	=	1.8V, 2 Kbit I^2C Serial EEPROM (Tape and Reel)
	24LCS52:	=	2.2V, 2 Kbit I^2C Serial EEPROM
	24LCS52T:	=	2.2V, 2 Kbit I^2C Serial EEPROM (Tape and Reel)
Temperature Range:	I	=	-40°C to +85°C
Package:	P	=	Plastic DIP (300 mil body), 8-lead
	SN	=	Plastic SOIC (150 mil body), 8-lead
	ST	=	Plastic TSSOP (4.4 mm), 8-lead
	MS	=	Plastic Micro Small Outline (MSOP), 8-lead
	MC	=	Micro Lead Frame (2x3 mm body), 8-lead
	MNY(1)	=	TDFN (2x3x0.75 mm body), 8-lead (Tape and Reel only)

Note 1: "Y" indicates a Nickel Palladium Gold (NiPdAu) finish.

Examples:

a) 24AA52-I/P: Industrial Temperature, 1.8V, PDIP package

b) 24AA52-I/SN: Industrial Temperature, 1.8V, SOIC package

c) 24AA52T-I/MS: Tape and Reel, Industrial Temperature, 1.8V, MSOP package

d) 24LCS52-I/P: Industrial Temperature, 2.2V, PDIP package

e) 24LCS52-I/MC: Industrial Temperature, 2.2V, DFN package

f) 24LCS52T-I/MS: Tape and Reel, Industrial Temperature, 2.2V, MSOP package

g) 24LCS52T-I/MNY: Tape and Reel, Industrial Temperature, 2.2V, TDFN package

© 1996-2011 Microchip Technology Inc.

NOTES:

© 1996-2011 Microchip Technology Inc.

Note the following details of the code protection feature on Microchip devices:

- Microchip products meet the specification contained in their particular Microchip Data Sheet.
- Microchip believes that its family of products is one of the most secure families of its kind on the market today, when used in the intended manner and under normal conditions.
- There are dishonest and possibly illegal methods used to breach the code protection feature. All of these methods, to our knowledge, require using the Microchip products in a manner outside the operating specifications contained in Microchip's Data Sheets. Most likely, the person doing so is engaged in theft of intellectual property.
- Microchip is willing to work with the customer who is concerned about the integrity of their code.
- Neither Microchip nor any other semiconductor manufacturer can guarantee the security of their code. Code protection does not mean that we are guaranteeing the product as "unbreakable."

Code protection is constantly evolving. We at Microchip are committed to continuously improving the code protection features of our products. Attempts to break Microchip's code protection feature may be a violation of the Digital Millennium Copyright Act. If such acts allow unauthorized access to your software or other copyrighted work, you may have a right to sue for relief under that Act.

Information contained in this publication regarding device applications and the like is provided only for your convenience and may be superseded by updates. It is your responsibility to ensure that your application meets with your specifications. MICROCHIP MAKES NO REPRESENTATIONS OR WARRANTIES OF ANY KIND WHETHER EXPRESS OR IMPLIED, WRITTEN OR ORAL, STATUTORY OR OTHERWISE, RELATED TO THE INFORMATION, INCLUDING BUT NOT LIMITED TO ITS CONDITION, QUALITY, PERFORMANCE, MERCHANTABILITY OR FITNESS FOR PURPOSE**.** Microchip disclaims all liability arising from this information and its use. Use of Microchip devices in life support and/or safety applications is entirely at the buyer's risk, and the buyer agrees to defend, indemnify and hold harmless Microchip from any and all damages, claims, suits, or expenses resulting from such use. No licenses are conveyed, implicitly or otherwise, under any Microchip intellectual property rights.

Trademarks

The Microchip name and logo, the Microchip logo, dsPIC, KEELOQ, KEELOQ logo, MPLAB, PIC, PICmicro, PICSTART, PIC^{32} logo, rfPIC and UNI/O are registered trademarks of Microchip Technology Incorporated in the U.S.A. and other countries.

FilterLab, Hampshire, HI-TECH C, Linear Active Thermistor, MXDEV, MXLAB, SEEVAL and The Embedded Control Solutions Company are registered trademarks of Microchip Technology Incorporated in the U.S.A.

Analog-for-the-Digital Age, Application Maestro, chipKIT, chipKIT logo, CodeGuard, dsPICDEM, dsPICDEM.net, dsPICworks, dsSPEAK, ECAN, ECONOMONITOR, FanSense, HI-TIDE, In-Circuit Serial Programming, ICSP, Mindi, MiWi, MPASM, MPLAB Certified logo, MPLIB, MPLINK, mTouch, Omniscient Code Generation, PICC, PICC-18, PICDEM, PICDEM.net, PICkit, PICtail, REAL ICE, rfLAB, Select Mode, Total Endurance, TSHARC, UniWinDriver, WiperLock and ZENA are trademarks of Microchip Technology Incorporated in the U.S.A. and other countries.

SQTP is a service mark of Microchip Technology Incorporated in the U.S.A.

All other trademarks mentioned herein are property of their respective companies.

© 1996-2011, Microchip Technology Incorporated, Printed in the U.S.A., All Rights Reserved.

Printed on recycled paper.

ISBN: 978-1-61341-786-7

QUALITY MANAGEMENT SYSTEM
CERTIFIED BY DNV
ISO/TS 16949:2009

Microchip received ISO/TS-16949:2009 certification for its worldwide headquarters, design and wafer fabrication facilities in Chandler and Tempe, Arizona; Gresham, Oregon and design centers in California and India. The Company's quality system processes and procedures are for its PIC® MCUs and dsPIC® DSCs, KEELOQ® code hopping devices, Serial EEPROMs, microperipherals, nonvolatile memory and analog products. In addition, Microchip's quality system for the design and manufacture of development systems is ISO 9001:2000 certified.

Worldwide Sales and Service

AMERICAS

Corporate Office
2355 West Chandler Blvd.
Chandler, AZ 85224-6199
Tel: 480-792-7200
Fax: 480-792-7277
Technical Support:
http://www.microchip.com/support
Web Address:
www.microchip.com

Atlanta
Duluth, GA
Tel: 678-957-9614
Fax: 678-957-1455

Boston
Westborough, MA
Tel: 774-760-0087
Fax: 774-760-0088

Chicago
Itasca, IL
Tel: 630-285-0071
Fax: 630-285-0075

Cleveland
Independence, OH
Tel: 216-447-0464
Fax: 216-447-0643

Dallas
Addison, TX
Tel: 972-818-7423
Fax: 972-818-2924

Detroit
Farmington Hills, MI
Tel: 248-538-2250
Fax: 248-538-2260

Indianapolis
Noblesville, IN
Tel: 317-773-8323
Fax: 317-773-5453

Los Angeles
Mission Viejo, CA
Tel: 949-462-9523
Fax: 949-462-9608

Santa Clara
Santa Clara, CA
Tel: 408-961-6444
Fax: 408-961-6445

Toronto
Mississauga, Ontario,
Canada
Tel: 905-673-0699
Fax: 905-673-6509

ASIA/PACIFIC

Asia Pacific Office
Suites 3707-14, 37th Floor
Tower 6, The Gateway
Harbour City, Kowloon
Hong Kong
Tel: 852-2401-1200
Fax: 852-2401-3431

Australia - Sydney
Tel: 61-2-9868-6733
Fax: 61-2-9868-6755

China - Beijing
Tel: 86-10-8569-7000
Fax: 86-10-8528-2104

China - Chengdu
Tel: 86-28-8665-5511
Fax: 86-28-8665-7889

China - Chongqing
Tel: 86-23-8980-9588
Fax: 86-23-8980-9500

China - Hangzhou
Tel: 86-571-2819-3187
Fax: 86-571-2819-3189

China - Hong Kong SAR
Tel: 852-2401-1200
Fax: 852-2401-3431

China - Nanjing
Tel: 86-25-8473-2460
Fax: 86-25-8473-2470

China - Qingdao
Tel: 86-532-8502-7355
Fax: 86-532-8502-7205

China - Shanghai
Tel: 86-21-5407-5533
Fax: 86-21-5407-5066

China - Shenyang
Tel: 86-24-2334-2829
Fax: 86-24-2334-2393

China - Shenzhen
Tel: 86-755-8203-2660
Fax: 86-755-8203-1760

China - Wuhan
Tel: 86-27-5980-5300
Fax: 86-27-5980-5118

China - Xian
Tel: 86-29-8833-7252
Fax: 86-29-8833-7256

China - Xiamen
Tel: 86-592-2388138
Fax: 86-592-2388130

China - Zhuhai
Tel: 86-756-3210040
Fax: 86-756-3210049

ASIA/PACIFIC

India - Bangalore
Tel: 91-80-3090-4444
Fax: 91-80-3090-4123

India - New Delhi
Tel: 91-11-4160-8631
Fax: 91-11-4160-8632

India - Pune
Tel: 91-20-2566-1512
Fax: 91-20-2566-1513

Japan - Yokohama
Tel: 81-45-471- 6166
Fax: 81-45-471-6122

Korea - Daegu
Tel: 82-53-744-4301
Fax: 82-53-744-4302

Korea - Seoul
Tel: 82-2-554-7200
Fax: 82-2-558-5932 or
82-2-558-5934

Malaysia - Kuala Lumpur
Tel: 60-3-6201-9857
Fax: 60-3-6201-9859

Malaysia - Penang
Tel: 60-4-227-8870
Fax: 60-4-227-4068

Philippines - Manila
Tel: 63-2-634-9065
Fax: 63-2-634-9069

Singapore
Tel: 65-6334-8870
Fax: 65-6334-8850

Taiwan - Hsin Chu
Tel: 886-3-5778-366
Fax: 886-3-5770-955

Taiwan - Kaohsiung
Tel: 886-7-536-4818
Fax: 886-7-330-9305

Taiwan - Taipei
Tel: 886-2-2500-6610
Fax: 886-2-2508-0102

Thailand - Bangkok
Tel: 66-2-694-1351
Fax: 66-2-694-1350

EUROPE

Austria - Wels
Tel: 43-7242-2244-39
Fax: 43-7242-2244-393

Denmark - Copenhagen
Tel: 45-4450-2828
Fax: 45-4485-2829

France - Paris
Tel: 33-1-69-53-63-20
Fax: 33-1-69-30-90-79

Germany - Munich
Tel: 49-89-627-144-0
Fax: 49-89-627-144-44

Italy - Milan
Tel: 39-0331-742611
Fax: 39-0331-466781

Netherlands - Drunen
Tel: 31-416-690399
Fax: 31-416-690340

Spain - Madrid
Tel: 34-91-708-08-90
Fax: 34-91-708-08-91

UK - Wokingham
Tel: 44-118-921-5869
Fax: 44-118-921-5820

08/02/11

© 1996-2011 Microchip Technology Inc.