240-ITSJ
VG 95234 Type Receptacle Connector
Jam Nut Mount with Reverse Bayonet Coupling

VG 95234 TYPE JAM NUT RECEPTACLE, REVERSE BAYONET COUPLING

How To Order									
Sample Part Number	**240-ITS**	**J**	**NF**	**20-3**	**P**	**S**	**C**	**B**	**N**
Filter Connector	VG 95234 Type								
Shell Style	**J** = Jam Nut **JT** = Jam Nut with Accessory Thread (See Note 2)								
Connector Class	See Table II								
Insert Arrangement	See pages B-88 – B-91								
Contact Gender	**P** = Pin **S** = Socket								
Termination Type	**S** = Solder Cup								
Filter Type	**C** = C Circuit (See Note 1)								
Capacitance	See Table III								
Alternate Insert Position	**W**, **X**, **Y**, **Z**, **N** = Normal (See pages B-88 – B-91)								

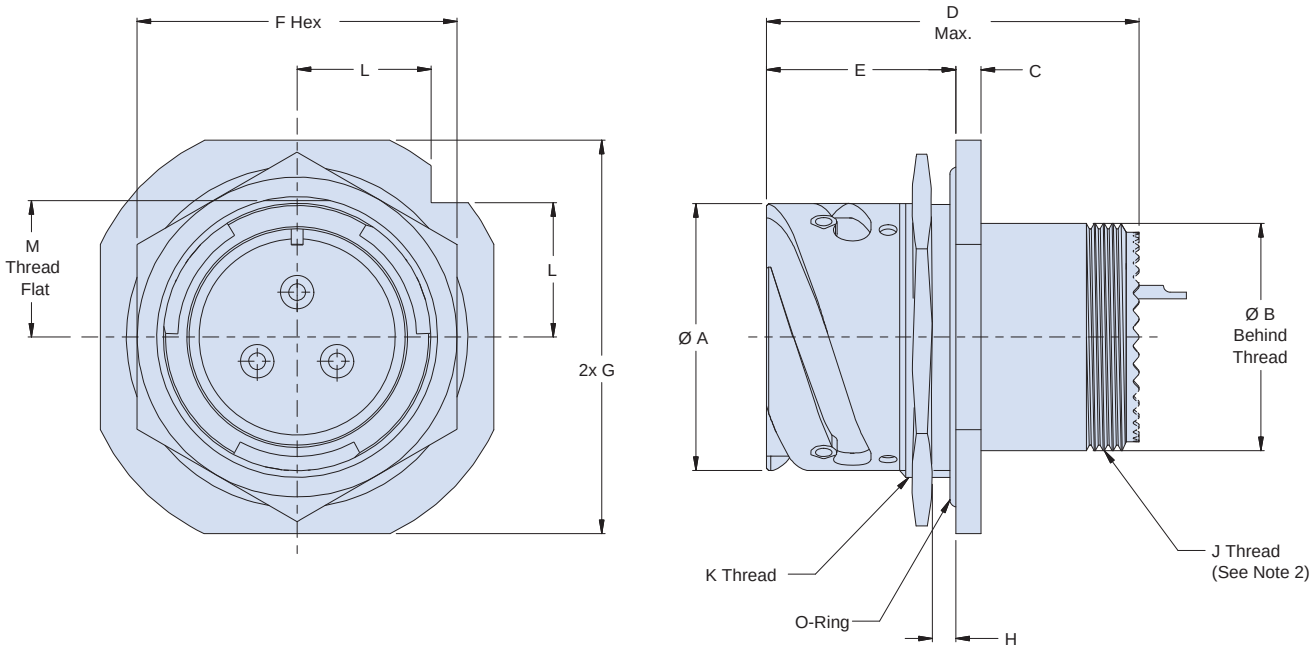

Notes

1. Other filter styles (Pi, C-L, L-C, Unbalanced Pi, Multi-Stage, Multi-Value) are available, please consult the factory.
2. Shell style JT shown. Shell style J is less accessory threads and teeth.

Dimensions in inches (millimeters) and are subject to change without notice.

© 2013 Glenair, Inc.
U.S. CAGE Code 06324
Printed in U.S.A.

Table I: Dimensions												
Shell Size	Ø A +.000 (.00) -.006 (.15)	Ø B Max	C ±.008 (±.20)	D Max	E ±.008 (±.20)	F Hex ±.016 (±.40)	G ±.008 (±.20)	H Panel	J Thread 2A	K Thread 2A	L	M Flat
10SL	.717 (18.2)	.638 (16.2)	.157 (3.99)	1.650 (41.9)	.965 (24.5)	1.063 (27.0)	1.252 (31.8)	.205 (5.2) .094 (2.4)	.625-24 UNEF	.875-20 UNEF	.441 (11.2)	.366 (9.3) .362 (9.2)
14S	.969 (24.6)	.756 (19.2)	.189 (4.80)	1.650 (41.9)	1.055 (26.8)	1.300 (33.0)	1.626 (41.3)	.295 (7.5) .094 (2.4)	.750-20 UNEF	1.125-18 UNEF	.575 (14.6)	.520 (13.2) .516 (13.1)
16S	1.079 (27.4)	.882 (22.4)	.189 (4.80)	1.650 (41.9)	1.055 (26.8)	1.496 (38.0)	1.748 (44.4)	.295 (7.5) .094 (2.4)	.875-20 UNEF	1.250-18 UNEF	.618 (15.7)	.587 (14.9) .583 (14.8)
16	1.079 (27.4)	.882 (22.4)	.189 (4.80)	1.800 (45.7)	1.268 (32.2)	1.496 (38.0)	1.748 (44.4)	.295 (7.5) .094 (2.4)	.875-20 UNEF	1.250-18 UNEF	.618 (15.7)	.587 (14.9) .583 (14.8)
18	1.213 (30.8)	1.008 (25.6)	.189 (4.80)	1.800 (45.7)	1.327 (33.7)	1.555 (39.5)	1.874 (47.6)	.354 (9.0) .094 (2.4)	1.000-20 UNEF	1.375-18 UNEF	.661 (16.8)	.622 (15.8) .618 (15.7)
20	1.346 (34.2)	1.142 (29.0)	.189 (4.80)	1.800 (45.7)	1.327 (33.7)	1.732 (44.0)	2.000 (50.8)	.354 (9.0) .094 (2.4)	1.125-18 UNEF	1.500-18 UNEF	.709 (18.0)	.689 (17.5) .685 (17.4)
22	1.472 (37.4)	1.268 (32.2)	.189 (4.80)	1.800 (45.7)	1.327 (33.7)	1.803 (45.8)	2.134 (54.2)	.358 (9.1) .094 (2.4)	1.250-18 UNEF	1.625-18 UNEF	.795 (20.2)	.740 (18.8) .736 (18.7)
24	1.610 (40.9)	1.390 (35.3)	.189 (4.80)	1.800 (45.7)	1.327 (33.7)	2.000 (50.8)	2.252 (57.2)	.358 (9.1) .094 (2.4)	1.375-18 UNEF	1.750-18 UNS	.795 (20.2)	.815 (20.7) .811 (20.6)
28	1.839 (46.7)	1.630 (41.4)	.220 (5.59)	1.800 (45.7)	1.386 (35.2)	2.157 (54.8)	2.500 (63.5)	.335 (8.5) .094 (2.4)	1.625-18 UNEF	2.000-18 UNS	.886 (22.5)	.933 (23.7) .929 (23.6)
32	2.102 (53.4)	1.882 (47.8)	.220 (5.59)	1.800 (45.7)	1.386 (35.2)	2.441 (32.0)	2.748 (69.8)	.256 (6.5) .094 (2.4)	1.875-16 UN	2.250-16 UN	.972 (24.7)	1.051 (26.7) 1.047 (26.6)
36	2.346 (59.6)	2.130 (54.1)	.220 (5.59)	1.800 (45.7)	1.386 (35.2)	2.795 (71.0)	3.000 (76.2)	.327 (8.3) .094 (2.4)	2.0625-16 UN	2.500-16 UN	1.059 (26.9)	1.201 (30.5) 1.197 (30.4)
40	2.579 (65.5)	2.323 (59.0)	.220 (5.59)	1.800 (45.7)	1.386 (35.2)	2.953 (75.0)	3.287 (83.5)	.327 (8.3) .094 (2.4)	2.3125-16 UN	2.750-16 UN	1.165 (29.6)	1.319 (33.5) 1.315 (33.4)

Table II: Connector Class		
Sym	Material	Finish Description
ME	Aluminum	Electroless Nickel
NF		Cadmium O.D. Over Electroless Nickel
ZL	Stainless Steel	Electro-Deposited Nickel

Table III: Capacitor Array Code Capacitance Range	
Class	C - Circuit (pF)
X	80,000 - 120,000
Y	40,000 - 60,000
Z	30,000 - 45,000
A	19,000 - 28,000
B	16,000 - 22,500
C	9,000 - 16,500

Dimensions in inches (millimeters) and are subject to change without notice.

© 2013 Glenair, Inc.
U.S. CAGE Code 06324
Printed in U.S.A.