240-382J
MIL-DTL-38999 Series II Type Filter Connector
Jam Nut Receptacle

D38999 SERIES II TYPE JAM NUT RECEPTACLE

How To Order										
Sample Part Number	**240-382**	**J**	**MT**	**14-35**	**P**	**S**	**P**	**A**	**N**	**N**
Filter Connector	MIL-DTL-38999 Series II Type									
Shell Style	**J** = Jam Nut									
Connector Class	See Table I									
Insert Arrangement	IAW MIL-STD-1560. (See pages B-18 – B-19)									
Contact Gender	**P** = Pin **S** = Socket									
Termination	**S** = Solder Cup **P** = PC Tail									
Filter Type	**P** = Pi Circuit **C** = C Circuit (See Note 1)									
Capacitance	See Table II									
Flange Mounting Style	**N** = Not Applicable									
Alternate Key Position	**A**, **B**, **C**, **D**, **N** = Normal (See page B-19)									

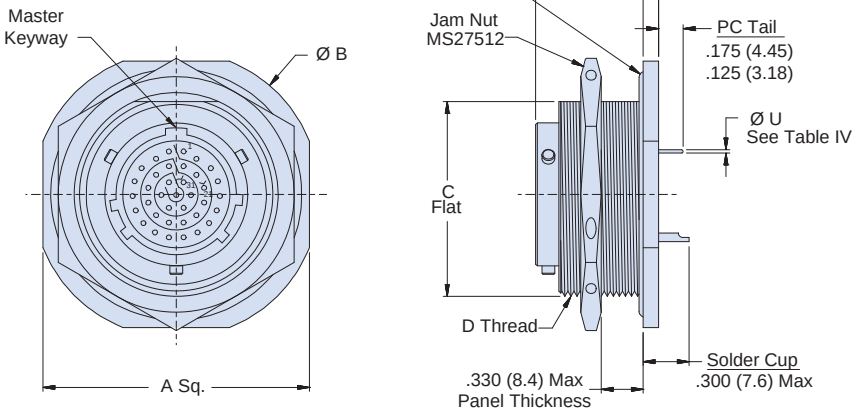

Notes

1. Other filter styles (C-L, L-C, Unbalanced Pi, Multi-Stage, Multi-Value) are available, please consult the factory.

Dimensions in inches (millimeters) and are subject to change without notice.

© 2013 Glenair, Inc.

Table I: Connector Class			
Sym	**Class**	**Material**	**Finish Description**
ME	Environmental	Aluminum	Electroless Nickel
MT	Environmental	Aluminum	Ni-PTFE *1000 Hour Grey*™ Nickel Fluorocarbon Polymer
NF	Environmental	Aluminum	Cadmium O.D. Over Electroless Nickel
ZL	Environmental	Stainless Steel	Electro-Deposited Nickel
ZN	Environmental	Aluminum	Zinc-Nickel, Olive Drab
ZR	Environmental	Aluminum	Zinc Nickel, Black - RoHS
H2*	Hermetic	Stainless Steel	Electro-Deposited Nickel
*Some dimensions do not apply. See drawing 240-382JH2			

Table II: Capacitor Array Code Capacitance Range		
Class	**Pi - Circuit (pF)**	**C - Circuit (pF)**
X*	160,000 - 240,000	80,000 - 120,000
Y*	80,000 - 120,000	40,000 - 60,000
Z*	60,000 - 90,000	30,000 - 45,000
A	38,000 - 56,000	19,000 - 28,000
B	32,000 - 45,000	16,000 - 22,500
C	18,000 - 33,000	9,000 - 16,500
D	8,000 - 12,000	4,000 - 6,000
E	3,300 - 5,000	1,650 - 2,500
F	800 - 1,300	400 - 650
G	400 - 600	200 - 300
J	70-120	35-60
* Filter Classes X, Y and Z are 250 VDC. All others are 500 VDC		

Table IV: PC Tail Dia	
Contact Size	**Ø U**
22D	.021 (0.53) .018 (0.46)
20	.031 (0.79) .029 (0.74)
16	.042 (1.07) .038 (0.97)
12	.096 (2.44) .092 (2.34)

Table III: Dimensions				
Shell Size	**A Sq. ±.016 (.40)**	**Ø B ±.016 (.40)**	**C Flat +.001 (.03) -.006 (.15)**	**D Thread Class 2A**
8	1.250 (31.8)	1.375 (34.9)	.817 (20.8)	.875-20 UNEF
10	1.375 (34.9)	1.500 (38.1)	.941 (23.9)	1.000-20 UNEF
12	1.500 (38.1)	1.625 (41.3)	1.065 (27.1)	1.125-18 UNEF
14	1.625 (41.3)	1.750 (44.5)	1.190 (30.2)	1.250-18 UNEF
16	1.781 (45.2)	1.938 (49.2)	1.320 (33.5)	1.375-18 UNEF
18	1.890 (48.0)	2.016 (51.2)	1.440 (36.6)	1.500-18 UNEF
20	2.016 (51.2)	2.141 (54.4)	1.565 (39.8)	1.625-18 UNEF
22	2.140 (54.4)	2.265 (57.5)	1.690 (42.9)	1.750-18 UNS
24	2.265 (57.5)	2.390 (60.7)	1.815 (46.1)	1.875-16 UN

Dimensions in inches (millimeters) and are subject to change without notice.

© 2013 Glenair, Inc. U.S. CAGE Code 06324 Printed in U.S.A.