MIL-DTL-26482 SERIES II TYPE JAM NUT RECEPTACLE

How To Order										
Sample Part Number	**240-264**	**J**	**ME**	**10-6**	**P**	**S**	**P**	**A**	**N**	**N**
Filter Connector	MIL-DTL-26482 Series II Type									
Shell Style	**J** = Jam Nut									
Connector Class	See Table I									
Insert Arrangement	IAW MIL-STD-1669. (See pages B-62 – B-63)									
Contact Gender	**P** = Pin **S** = Socket									
Termination	**P** = PC Tail **S** = Solder Cup									
Filter Type	**P** = Pi Circuit **C** = C Circuit (See Note 1)									
Capacitance	See Table II									
Flange Mounting Style	**N** = Not Applicable									
Alternate Insert Position	**W, X, Y, Z, N** = Normal (See page B-63)									

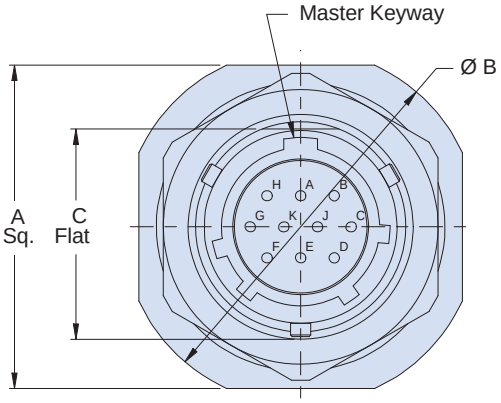

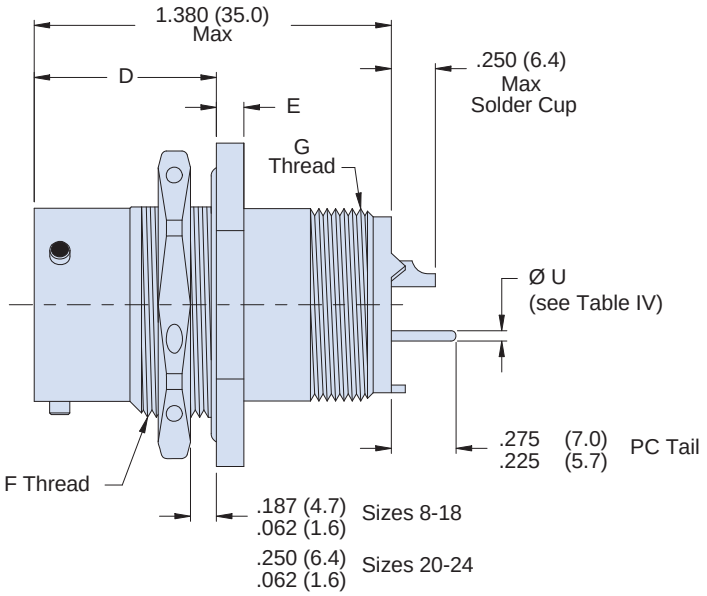

Notes

1. Other filter styles (C-L, L-C, Unbalanced Pi, Multi-Stage, Multi-Value) are available, please consult the factory.

Dimensions in inches (millimeters) and are subject to change without notice.

© 2013 Glenair, Inc.
U.S. CAGE Code 06324
Printed in U.S.A.

Table I: Connector Class			
Sym	Class	Material	Finish Description
ME	Environmental	Aluminum	Electroless Nickel
MT	Environmental	Aluminum	Ni-PTFE *1000 Hour Grey*™ Nickel Fluorocarbon Polymer
NF	Environmental	Aluminum	Cadmium O.D. Over Electroless Nickel
ZL	Environmental	Stainless Steel	Electro-Deposited Nickel
ZN	Environmental	Aluminum	Zinc-Nickel, Olive Drab
ZR	Environmental	Aluminum	Zinc Nickel, Black - RoHS
H2*	Hermetic	Stainless Steel	Electro-Deposited Nickel
*Some dimensions do not apply. See drawing 240-264JH2			

Table II: Capacitor Array Code Capacitance Range		
Class	Pi - Circuit (pF)	C - Circuit (pF)
X*	160,000 - 240,000	80,000 - 120,000
Y*	80,000 - 120,000	40,000 - 60,000
Z*	60,000 - 90,000	30,000 - 45,000
A	38,000 - 56,000	19,000 - 28,000
B	32,000 - 45,000	16,000 - 22,500
C	18,000 - 33,000	9,000 - 16,500
D	8,000 - 12,000	4,000 - 6,000
E	3,300 - 5,000	1,650 - 2,500
F	800 - 1,300	400 - 650
G	400 - 600	200 - 300
J	70-120	35-60
* Filter Classes X, Y and Z are 250 VDC. All others are 500 VDC		

Table IV: PC Tail Dia	
Contact Size	Ø U
20	.031 (0.79) .029 (0.74)
16	.042 (1.07) .038 (0.97)
12	.096 (2.44) .092 (2.34)

Table III: Dimensions							
Shell Size	A Sq.	Ø B	C Flat ±.005 (.13)	D	E	F Thread	G Thread
8	.954 (24.2) .923 (23.4)	1.078 (27.4) 1.047 (26.6)	.525 (13.3)	.707 (18.0) .658 (17.6)	.113 (2.9) .086 (2.2)	.5625-24 UNEF-2A	.5000-20 UNF-2A
10	1.078 (27.4) 1.047 (26.6)	1.203 (30.6) 1.172 (29.8)	.650 (16.5)	.707 (18.0) .658 (17.6)	.113 (2.9) .086 (2.2)	.6875-24 UNEF-2A	.6250-24 UNEF-2A
12	1.266 (32.2) 1.235 (31.4)	1.391 (35.3) 1.360 (34.5)	.813 (20.6)	.707 (18.0) .658 (17.6)	.113 (2.9) .086 (2.2)	.8750-20 UNEF-2A	.7500-20 UNEF-2A
14	1.391 (35.3) 1.360 (34.5)	1.516 (38.6) 1.485 (37.7)	.937 (23.8)	.707 (18.0) .658 (17.6)	.113 (2.9) .086 (2.2)	1.0000-20 UNEF-2A	.8750-20 UNEF-2A
16	1.516 (38.5) 1.485 (37.7)	1.641 (41.7) 1.610 (40.9)	1.061 (27.0)	.707 (18.0) .658 (17.6)	.113 (2.9) .086 (2.2)	1.1250-18 UNEF-2A	1.0000-20 UNEF-2A
18	1.641 (41.7) 1.610 (40.9)	1.766 (44.9) 1.735 (44.1)	1.186 (30.1)	.707 (18.0) .658 (17.6)	.113 (2.9) .086 (2.2)	1.2500-18 UNEF-2A	1.0625-18 UNEF-2A
20	1.828 (46.6) 1.797 (45.6)	1.954 (49.6) 1.923 (48.8)	1.311 (33.3)	.772 (19.6) .721 (18.3)	.148 (3.8) .096 (2.4)	1.3750-18 UNEF-2A	1.1875-18 UNEF-2A
22	1.954 (49.6) 1.923 (48.8)	2.078 (52.8) 2.047 (52.0)	1.436 (36.5)	.772 (19.6) .721 (18.3)	.148 (3.8) .096 (2.4)	1.5000-18 UNEF-2A	1.3125-18 UNEF-2A
24	2.078 (52.8) 2.047 (52.0)	2.203 (56.0) 2.172 (55.2)	1.561 (39.7)	.772 (19.6) .721 (18.3)	.148 (3.8) .096 (2.4)	1.6250-18 UNEF-2A	1.4375-18 UNEF-2A

Dimensions in inches (millimeters) and are subject to change without notice.

© 2013 Glenair, Inc. U.S. CAGE Code 06324 Printed in U.S.A.