

2375 SERIES

FEATURES

- Up to 18:1 Bandwidths
- Models from .5 to 18 GHz
- SMA Connectors
- Meet MIL-E-5400 Class 3 or Equivalent
- Screenable to MIL-P-23971 or Equivalent

SPECIFICATIONS

Frequency (GHz)	Loss[1] max (dB)	Unbalance[2] max (dB)	VSWR max	Isolation min (dB)	Deviation from Phase Quadrature typ	Model Number
.5-2.0	.40	1	1.15	24	± 2°	2375-1
1.0-4.0	.40	1	1.25	22	± 3°	2375-2
2.0-8.0	.40	1	1.30	20	± 5°	2375-3
4.0-12.4	.40	1	1.35	18	± 5°	2375-4
6.5-18.0	.60	1	1.35	16	± 4°	2375-5
1.0-18.0	.80[3]	2.2	1.50	15	± 10°	2375-7
2.0-18.0	.60[4]	2.2	1.45	20[5]	± 8°	2375-9

Average power rating 50 watts, normalized at 1 GHz, 1.5 kW peak.

NOTES:

1. Maximum loss is the actual dissipative loss and reflective loss due to VSWR. It does not include coupling loss.
2. Unbalance is measured as the difference between the coupled and mainline output ports from the mean coupling at each frequency.
3. 1.2 dB 6-12 GHz…1.6 dB 12-18 GHz
4. 1 dB loss 6-12.4 GHz…1.25 dB loss 12.4-18 GHz
5. 16 dB minimum from 12.4-18 GHz

CONFIGURATIONS

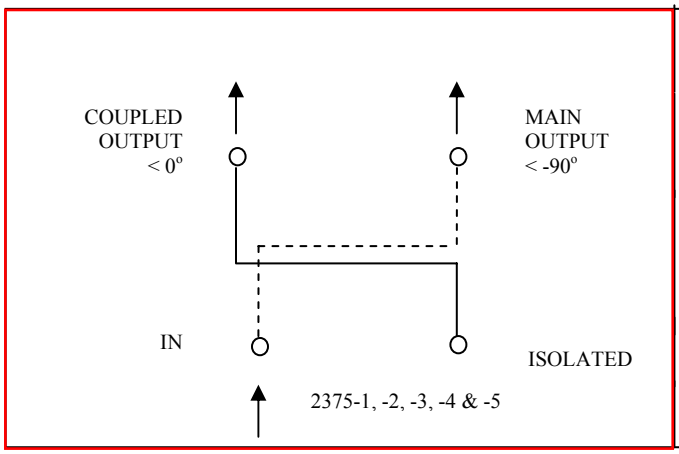

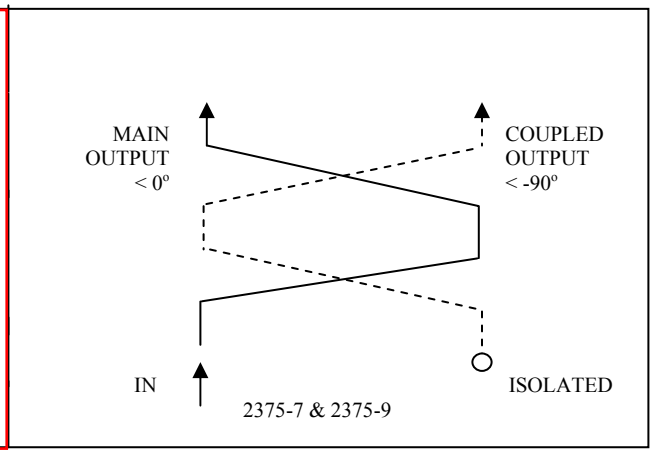

Spectrum Microwave ● 8 Executive Drive ● Hudson, NH 03051 ● Phone: 603-459-1600 ● Fax: 603.459.1605
www.SpectrumMicrowave.com

OUTLINE DRAWINGS

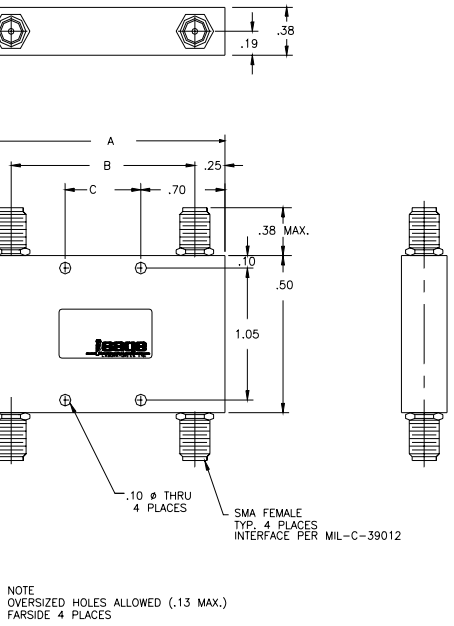

FIGURE 1

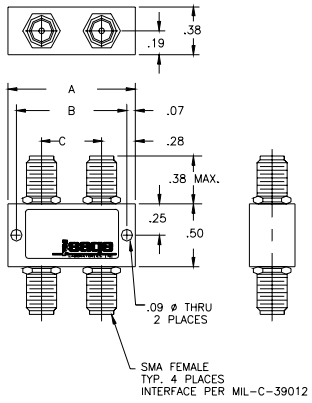

FIGURE 2

Model Numbers	See Figure	Dimensions (See Drawing) A"	A (cm)	B"	B (cm)	C"	C (cm)	Weights Ounces	Grams
2375-1	2	5.36	(13,61)	5.22	(13,26)	4.80	(12,19)	2.1	59
2375-2	2	2.97	(7,54)	2.83	(7,19)	2.41	(6,12)	1.4	40
2375-3	2	1.78	(4,52)	1.64	(4,17)	1.22	(3,10)	1.2	34
2375-4	2	1.31	(3,33)	1.17	(2,97)	.75	(1,91)	0.7	20
2375-5	2	1.06	(2,69)	.92	(2,34)	.50	(1,27)	0.5	14
2375-7	1	2.53	(6,43)	2.03	(5,16)	1.13	(2,87)	2.3	65
2375-9	1	2.03	(5,16)	1.53	(3,89)	.63	(1,60)	2.0	57

MISCELLANEOUS:

1. Spectrum Microwave "Standard Warranty and Order Terms and Conditions" apply to all orders.
2. All specifications subject to change without notice.
3. Check "Ordering and Availability Listing" for delivery and ordering information.
4. Contact our local Manufacturers Representative for pricing.

Specification Revision - 070710