TOSHIBA

FILE NO. 030-200507

SERVICE MANUAL

Plasma Color Television

42WP56P

© TOSHIBA CORPORATION, 2005

Published in Japan, Sep. 2005 (YC)

TABLE OF CONTENTS

SERVICE SAFETY PRECAUTIONS 3
SERVICE MODE 5
LOCATION OF CONTROLS 10
LAYOUT OF MAJOR BOARDS 12
MECHANICAL DISASSEMBLY 13
EXPLODED VIEW 15
PACKING DISASSEMBLY 17
CHASSIS AND CABINET REPLACEMENT PARTS LIST 18
PC BOARDS TOP & BOTTOM VIEW 23
CIRCUIT BLOCK DIAGRAM 37
SPECIFICATIONS 38
APPENDIX:
SCHEMATIC DIAGRAM

⚠ SERVICE SAFETY PRECAUTIONS

- The caution items shown here describe major safety issues and should always be observed.
- The meanings of the various indications are as follows.

⚠ **WARNING**	Indicates a hypothetical situation in which service personnel and nearby third parties, or even end users due to a product defect after the service operation is completed, could possibly be in danger of injury or even death in the event of operational error.
⚠ **CAUTION**	Indicates a hypothetical situation in which service personnel and nearby third parties, or even end users after the service operation is completed, could possibly be in danger of injury, or where there could be physical damage in the event of operational error.

* Physical damage means major damage to a home, furnishings and other possessions.

Examples of marks

SHOCK HAZARD	The △ indicates caution (including danger and warning). The actual meaning of this caution is indicated inside the △ or nearby illustrations or text. The example shown to the left indicates the danger of "electrical shock".
PROHIBIT DISASSEMBLING	The ⃠ indicates a forbidden action. The actual meaning of this caution is indicated inside the ⃠ or nearby illustrations or text. The example shown to the left indicates that disassembly is forbidden.
UNPULUG	The ● indicates a forced action (an action that must be performed). The actual meaning of this forced action is indicated by ● or nearby illustrations or text. The example shown to the left indicates that the power plug must be disconnected.

	⚠ WARNING
KEEP CHILDREN AWAY	• Always advise users to keep children away. There is danger of injury to children from tools, disassembled products, etc.
UNPULUG	• Always disconnect the power plug before starting work whenever power is not required. Failure to disconnect the power plug before starting work can result in electrical shock.
SHOCK HAZARD	• Depending on the model, use an insulation transformer or wear gloves when servicing with the power on, and disconnect the power plug to avoid electrical shock when replacing parts. In some cases, alternating current is also impressed in the chassis, so electrical shock is possible if the chassis is contacted with the power on.
USE SPECIFIED PARTS	• Always use the replacement parts specified for the particular model when making repairs. The parts used in products have the necessary safety characteristics such as inflammability, voltage resistance, etc.; therefore, use only replacement parts that have these same characteristics. Use only the specified parts when the ⚠ mark is included in a circuit diagram or parts list.
CAUTION FOR WIRING	• Parts mounting and routing of the wiring should be the same as that used originally. For safety purposes, insulating materials such as tubing or tape is sometimes used and printed circuit boards are sometimes mounted floating. Also make sure that wiring is routed and clamped to avoid parts that generate heat and which use high voltage. Always follow the original scheme.
CAUTION FOR ASSEMBLING / WIRING	• After a repair has been completed, reassemble all disassembled parts, and route and reconnect the wiring, in accordance with the original scheme. Do not allow internal wiring to be pinched by cabinets, panels, etc. Any error in reassembly or wiring can result in electrical leakage, flame, etc., and may be hazardous.
CHECK INSULATION RESISTANCE	• After completing the work, disconnect the power plug from the outlet, remove the antenna, turn on the power switch. Then, use a 500V insulation resistance meter to check the insulation resistance of the antenna terminal, other metallic parts and between the prongs of the power plug to make sure that the insulation resistance is 1M Ω or more. The set will require inspection and repair if the insulation resistance is below this value.
PROHIBIT REMODELING	• Never remodel the product in any way. Remodeling can result in improper operation, malfunction, or electrical leakage and flame, which may be hazardous

SERVICE MODE

1. ENTERING SERVICE MODE

1) Press 🔇 button once on Remote Control.

2) Press 🔇 button again and keep pressing.

3) While pressing the 🔇 button, press MENU button on TV set.

(Service mode display)

2. DISPLAYING THE ADJUSTMENT MENU

1) Press MENU button on TV.

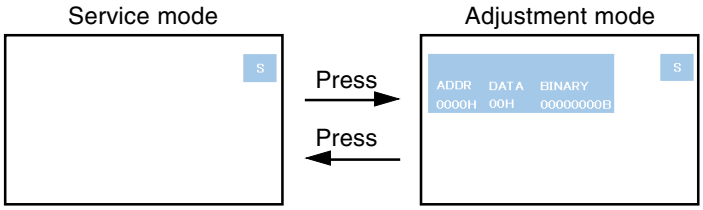

3. KEY FUNCTION IN THE SERVICE MODE

The following key entry during display of adjustment menu provides special functions.

Test signal selection :	⊸⊕ button (on Remote)
Selection of the adjustment items :	Channel ▲/▼ (on TV or Remote)
Change of the data value :	Volume ◿ +/– (on TV or Remote)
Adjustment menu mode ON/OFF :	MENU button (on TV)
Initialization of the memory :	CALL + Channel button on TV (▲)
Reset the count of operating protect circuit to “00”:	CALL + Channel button on TV (▼)
“RCUT” selection :	1 button
“GCUT” selection :	2 button
“BCUT” selection :	3 button
“SCNT” selection :	4 button
“COLP” selection :	5 button – – – – – Color thickness correction
“TNTC” selection :	6 button
Automatic A/D Adjustment(PC, Component) :	7 button
Self diagnostic display ON/OFF :	9 button

note: Displayed differently as shown below, depending on the setting of the receiving color system.
COLP (PAL)
COLC (NTSC)
COLS (SECAM)

CAUTION : Never try to perform initialization unless you have changed the memory IC.

4. SELECTING THE ADJUSTING ITEMS

1) Every pressing of CHANNEL ▲ button in the service mode changes the adjustment items in the order of table-2. (▼ button for reverse order)

5. ADJUSTING THE DATA

1) Pressing of VOLUME +/– button will change the value of data in the range from 00H to FFH. The variable range depends on the adjusting item.

6. EXIT FROM SERVICE MODE

1) Pressing POWER button to turn off the TV once.

■ INITIALIZATION OF MEMORY DATA

After replacing EEPROM IC, the following initialization is required.

1. Enter the service mode, then select any register item.
2. Press and hold the CALL button on the Remote, then press the CHANNEL ▲ button on the TV. The initialization of EEPROM IC has been complated.
3. Check the picture carefully. If necessary, adjust any adjustment item above. Perform “Auto tune” on the owner’s manual.

CAUTION: Never attempt to initialize the data unless EEPROM IC has been replaced.

7. TEST SIGNAL SELECTION

1) Every pressing of ⊖ button on the Remote Control changes the built-in test patterns on screen as described below in SERVICE MODE.

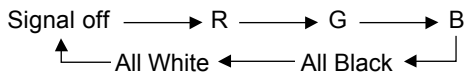

Signals	Picture
• Red raster • Green raster • Blue raster • All Black • All White	

8. SELF DIAGNOSTIC FUNCTION

1) Press “9” button on Remote Control during display of adjustment menu in the service mode.
   The diagnosis will begin to check if interface among IC’s is executed properly.
2) During diagnosis, the following displays are shown.

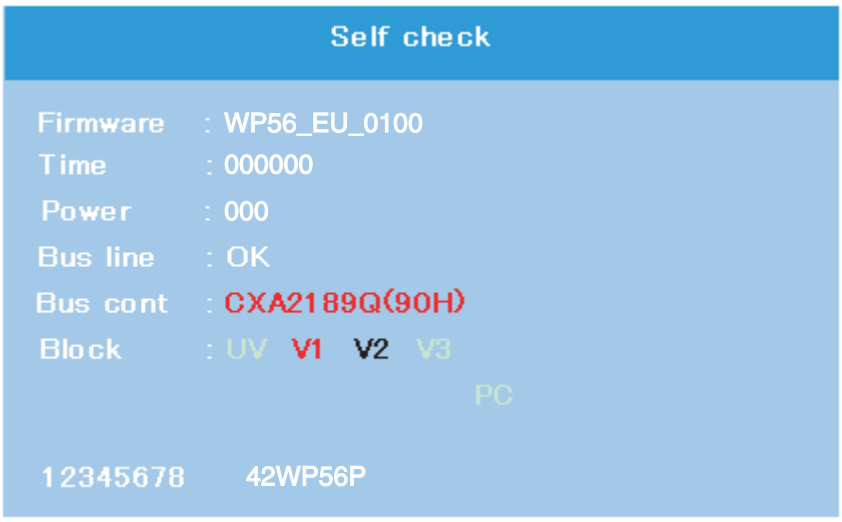

① Firmware :
Version information of microprocessor
In case of file name : WP56_EU and Version : 0100 indicates[WP56_EU_0100].

② Time : Total hour of turn the TV on. (Unit : H)

③ Power : Operation number of protecting circuit ----"000" is normal.
When indication is other than "000", overcurrent apt to flow, and circuit parts may possibly be damaged.

④ Bus line : --"OK" is normal
"SCL-GND"(Red indication) : SCL-GND short circuit
"SDA-GND"(Red indication) : SDA-GND short circuit
"SCL-SDA"(Red indication) : SCL-SDA short circuit

⑤ Bus cont : --- "OK" is normal.
NG is abnormal(Red indication), when type name of semiconductor indicates.

⑥ Block
UV : TV reception mode
V1 : VIDEO 1 input mode (→ 1)
V2 : VIDEO 2 input mode (→ 2)
V3 : VIDEO 3 input mode (→ 3)

⑦ 8 digit : CD number

⑧ Model name (7 digit)

9. VERSION CHECK MODE

1) Press “9” button twice on Remote Control during display of adjustment menu in the service mode. The version of main MPU will begin to check.
2) During Version Check, the following displays are shown.

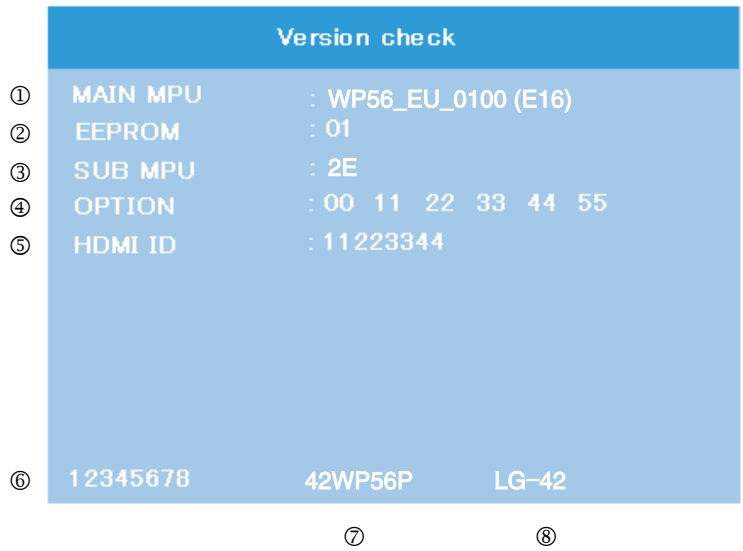

① MAIN MPU :
Version information of microprocessor
In case of file name : WP56_EU, Version 0100 for Code Program Version and (E16) for OSD Version indicates [WP56_EU_0100(E16)]

② EEPROM :
Version information of EEPROM : Display 1 byte data.

③ SUB MPU :
Version information of SUB MPU : Display 1 byte data.

④ OPTION :
Option information : Display six numbers of 1 byte data.

⑤ HDMI ID :
HDMI ID information : Display 4 byte data.

⑥ CD number : Display 8 digit number

⑦ Model name : Display 7 digit number

⑧ Panel Vender information display
The following Panel Vender and screen size are displayed.

Panel	Panel Vender	Screen Size(Inch)
LCD	LPL	-23
	SHP	-26
	CMO	-27
		-32
		-37
		-42
PDP	LG	-42

Example : LG-42 indicates that Vender is LG and Screen Size is 42 inch.

10. STATUS CHECK MODE

1) Press “9” button thrice on Remote Control during display of adjustment menu in the service mode. The status of this model will begin to check.
2) During Status Check, the following displays are shown.

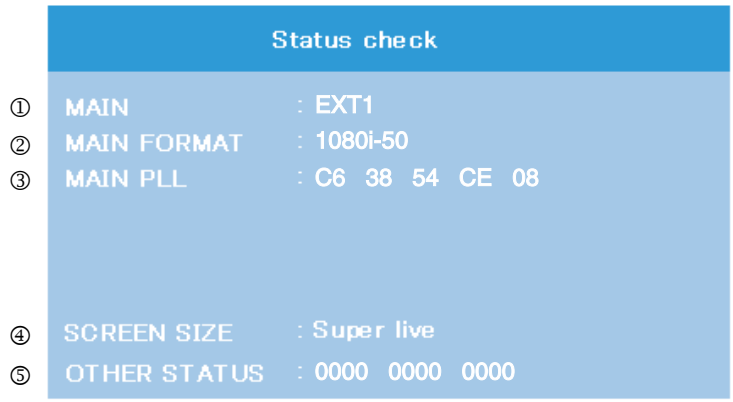

① MAIN :
Main source information :
Display RF position number (0 - 99) on the main screen, or Input Source (EXT1/2/3/HDMI etc.)

② MAIN FORMAT :
Display Video and PC format information

③ MAIN PLL :
Main PLL information : Display five numbers of 1 byte data.

④ SCREEN SIZE :
Display the screen size as follows.

Super live
Cinema
Subtitle
14:9
Wide
4:3

⑤ OTHER STATUS :
Other status information : Display three numbers of 2 byte data.

LOCATION OF CONTROLS

CONTROLS AND INPUT CONNECTIONS

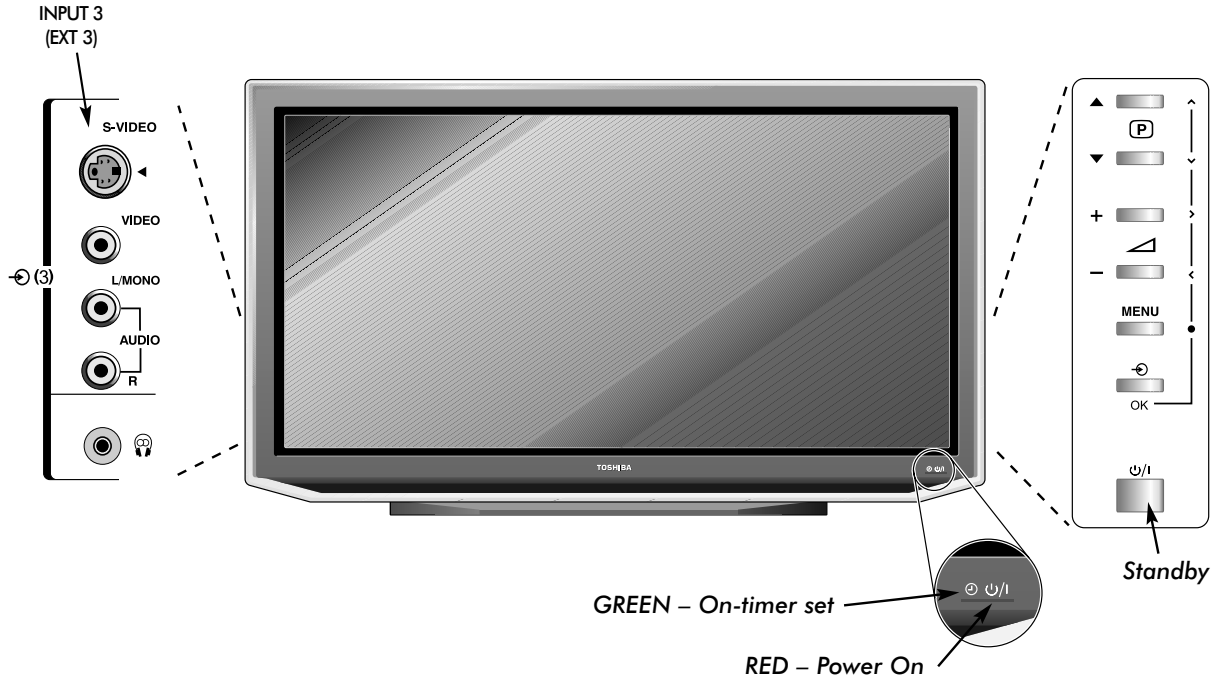

CONNECTING EXTERNAL EQUIPMENT

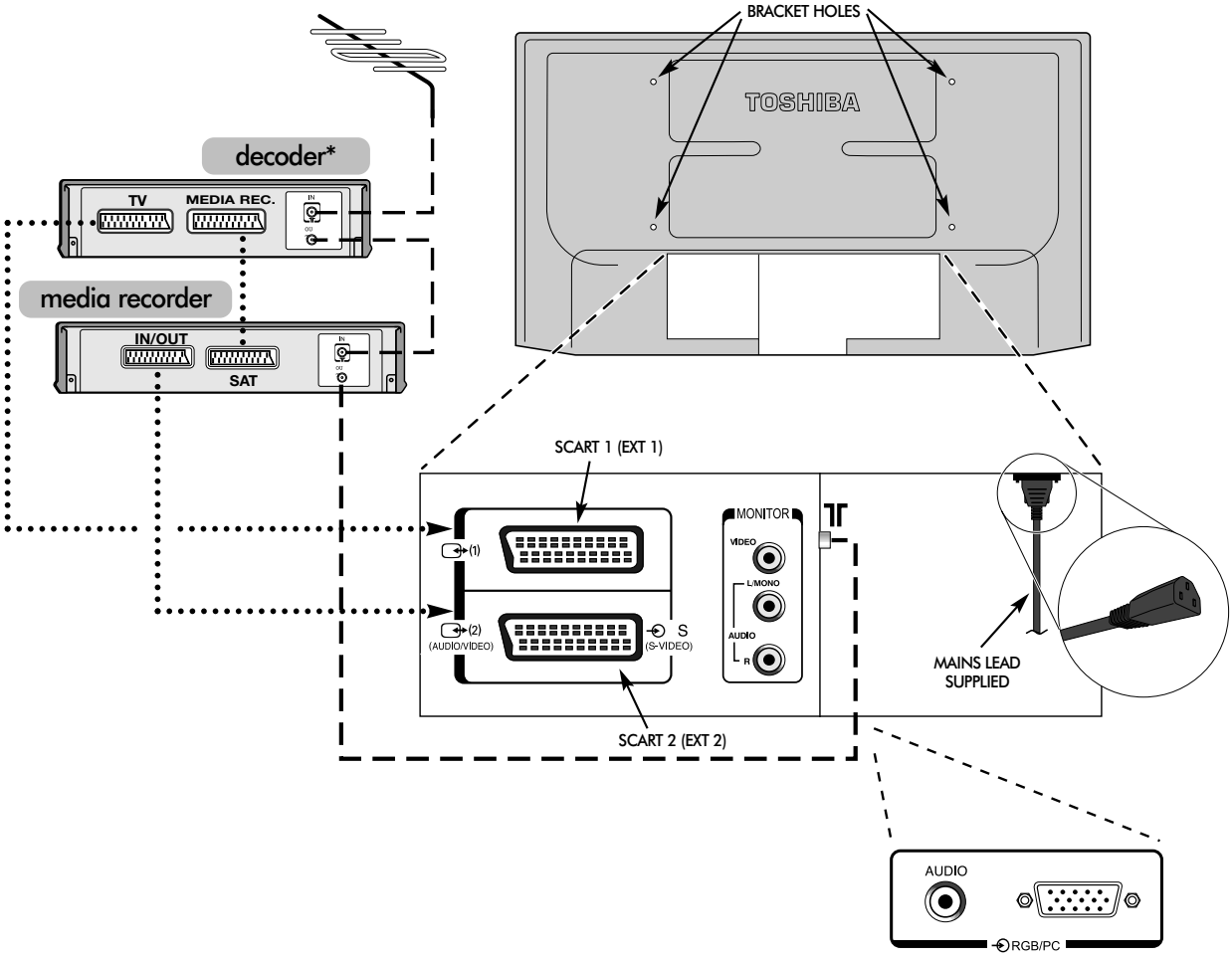

Remote control

To bring up on-screen information and for the text initial/index function

To display text services

For On/Standby mode

Number buttons

To return to the previous programme

To select input from external sources
To access sub-pages when in text mode

Selectable picture preferences

Widescreen viewing

On-screen Menus

To exit Menus

To change programme positions and text pages
To alter the volume
When using menus the arrows move the cursor on the screen up, down, left or right. **OK** *to confirm your selection*

Text control buttons

Stereo/Bilingual reception

To select mode

Bass Boost

To mute the sound

When using a TOSHIBA VCR or DVD:
press ⏸ to PAUSE
press ⏏ to EJECT
press ⏮ to SKIP-REWIND
press ⏭ to SKIP-FORWARD
press ▶ to PLAY
press ■ to STOP
press ◀◀ to REWIND
press ▶▶ to FAST FORWARD

When in TV mode:
Time display
When in text mode:
To reveal concealed text
To hold a wanted page
To enlarge text display size
To select a page whilst viewing a normal picture

LAYOUT OF MAJOR BOARDS

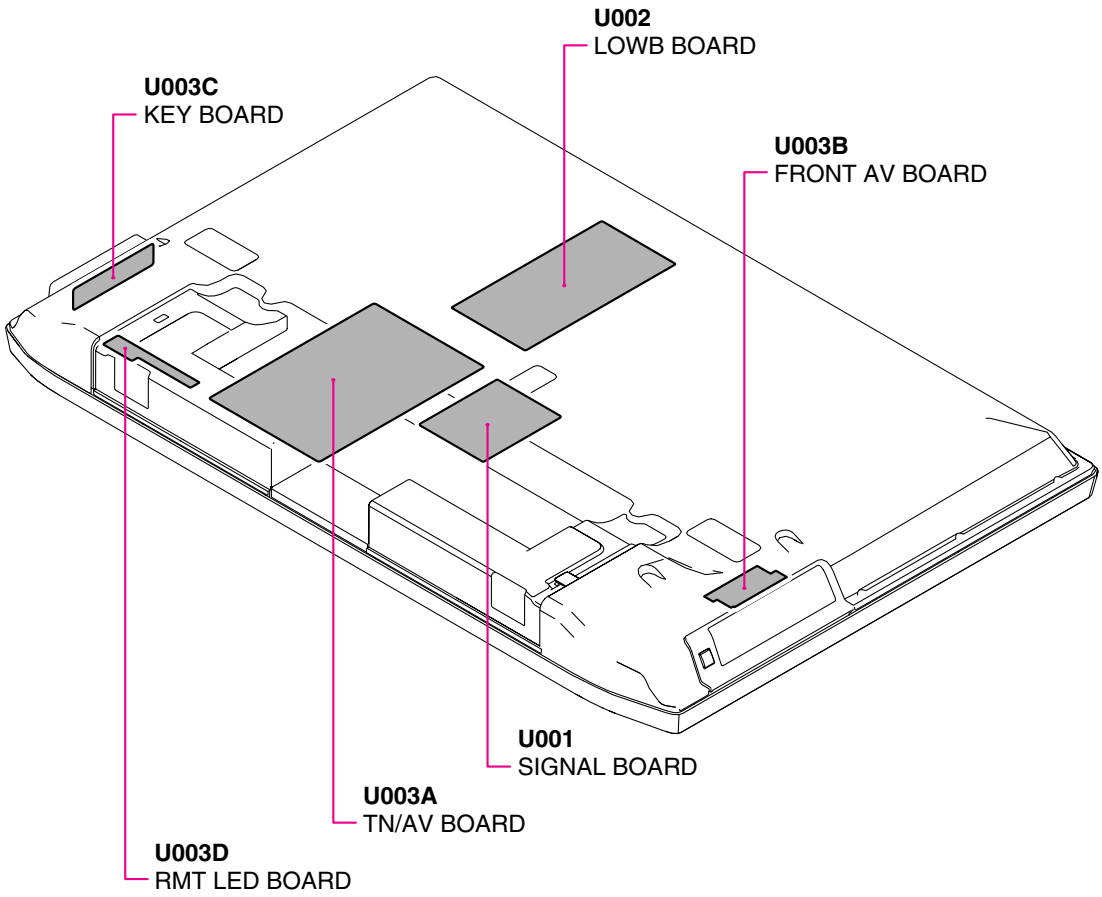

MECHANICAL DISASSEMBLY

1. Remove the stand (foot) and back cover.

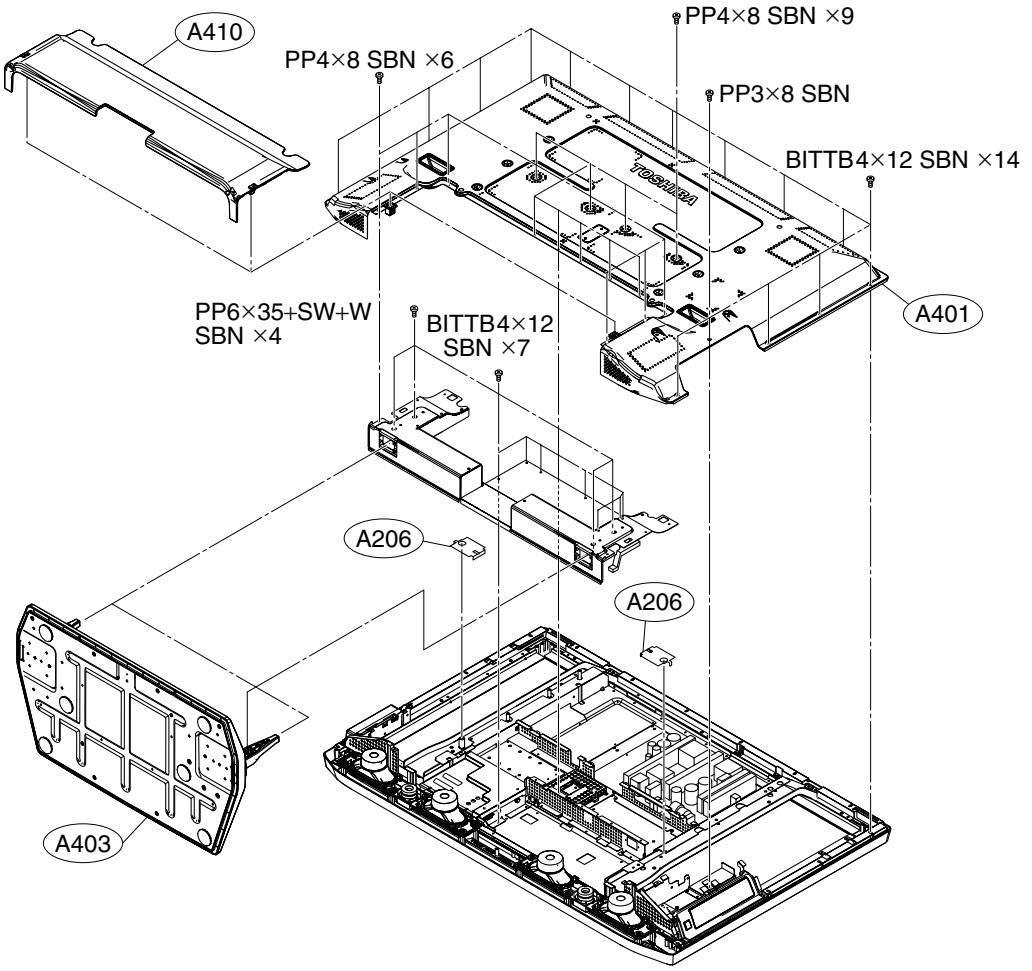

2. Remove the boards (LOWB, TN/AV, FRONT AV, KEY) and piece key ass'y.

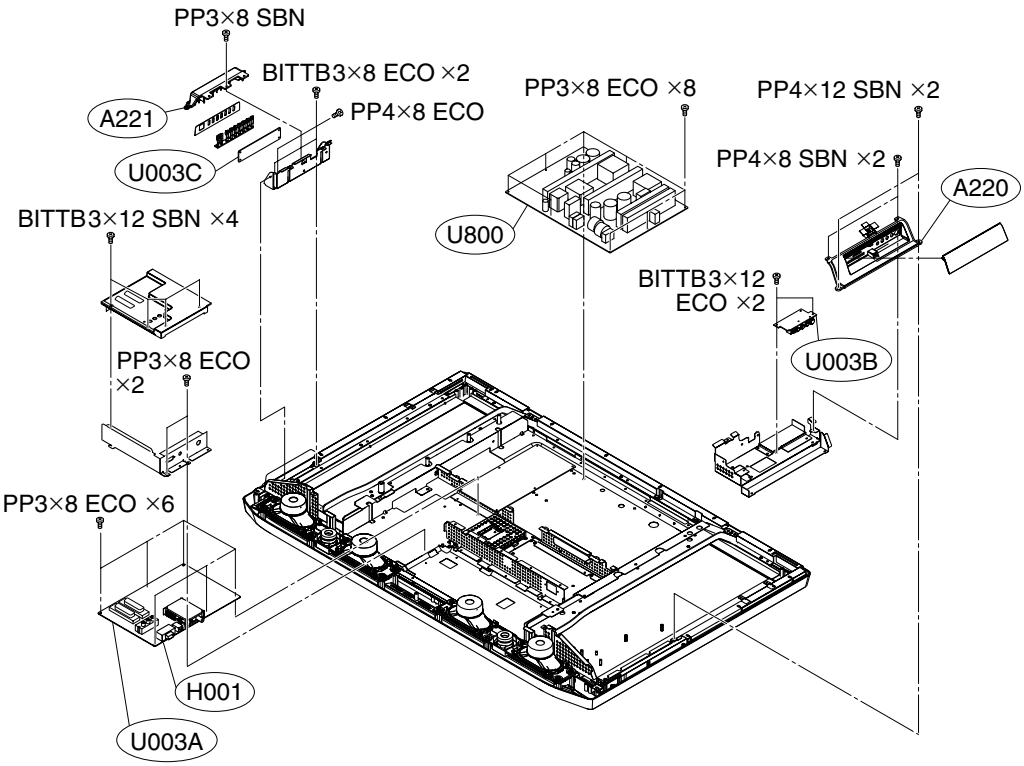

3. Remove the boards (SIGNAL, RMT LED) and speaker.

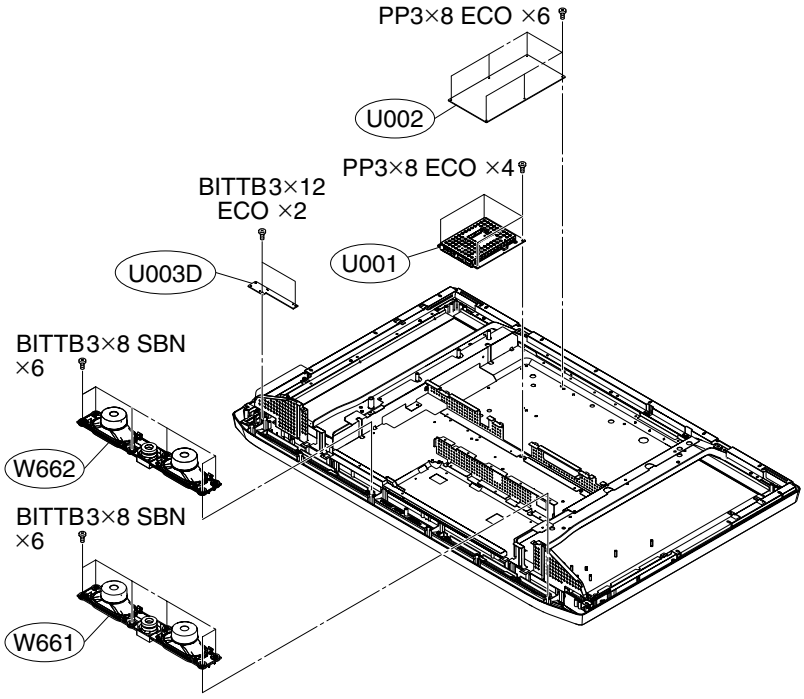

4. Remove the display.

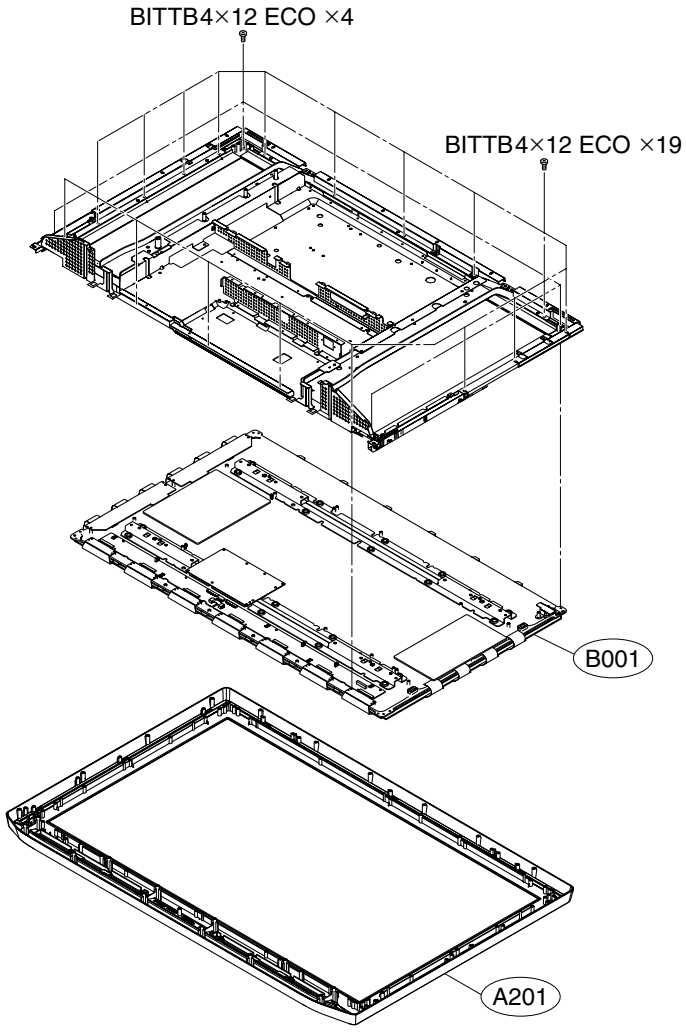

EXPLODED VIEWS

1. Chassis Block

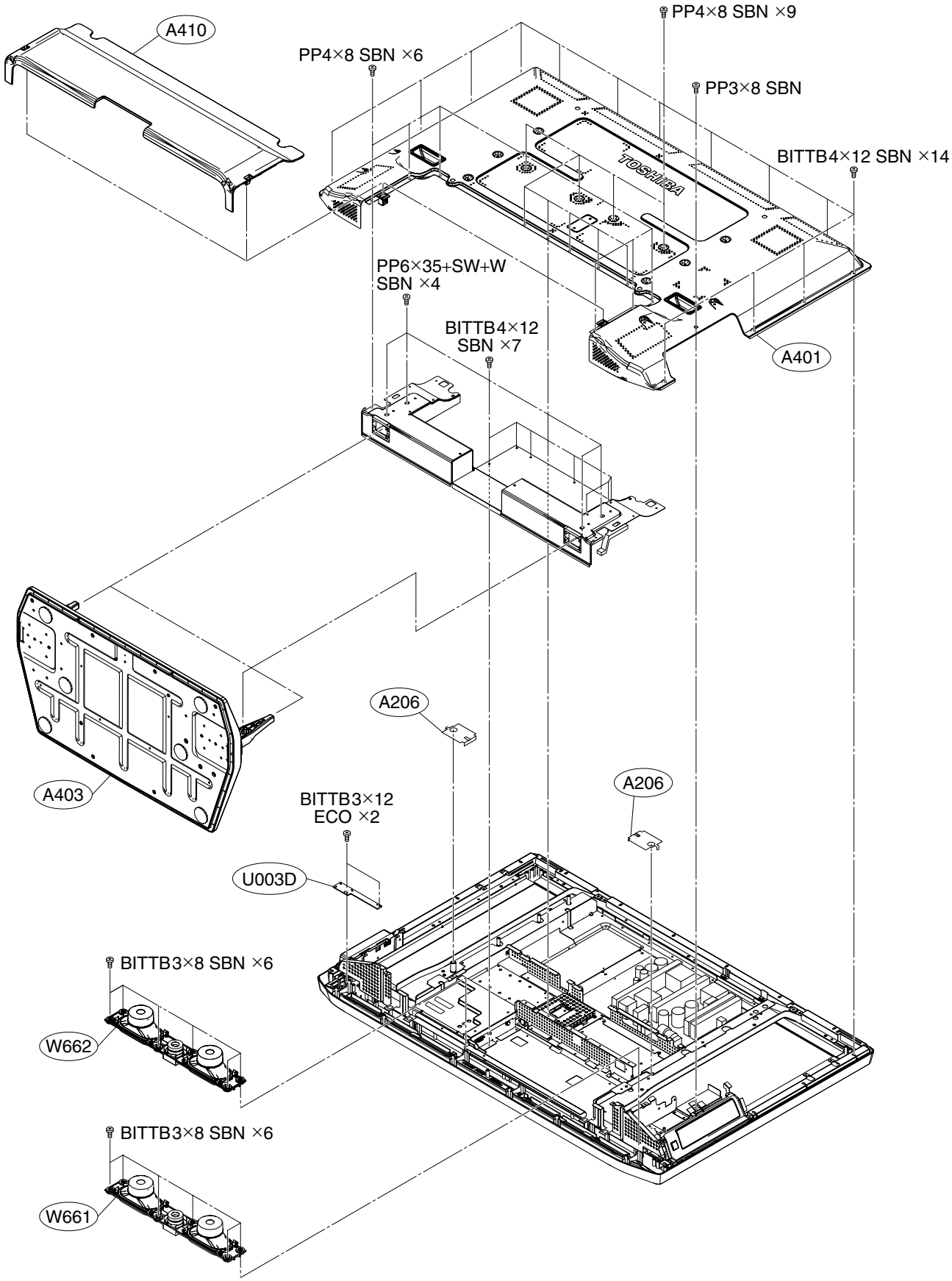

2. Main Block

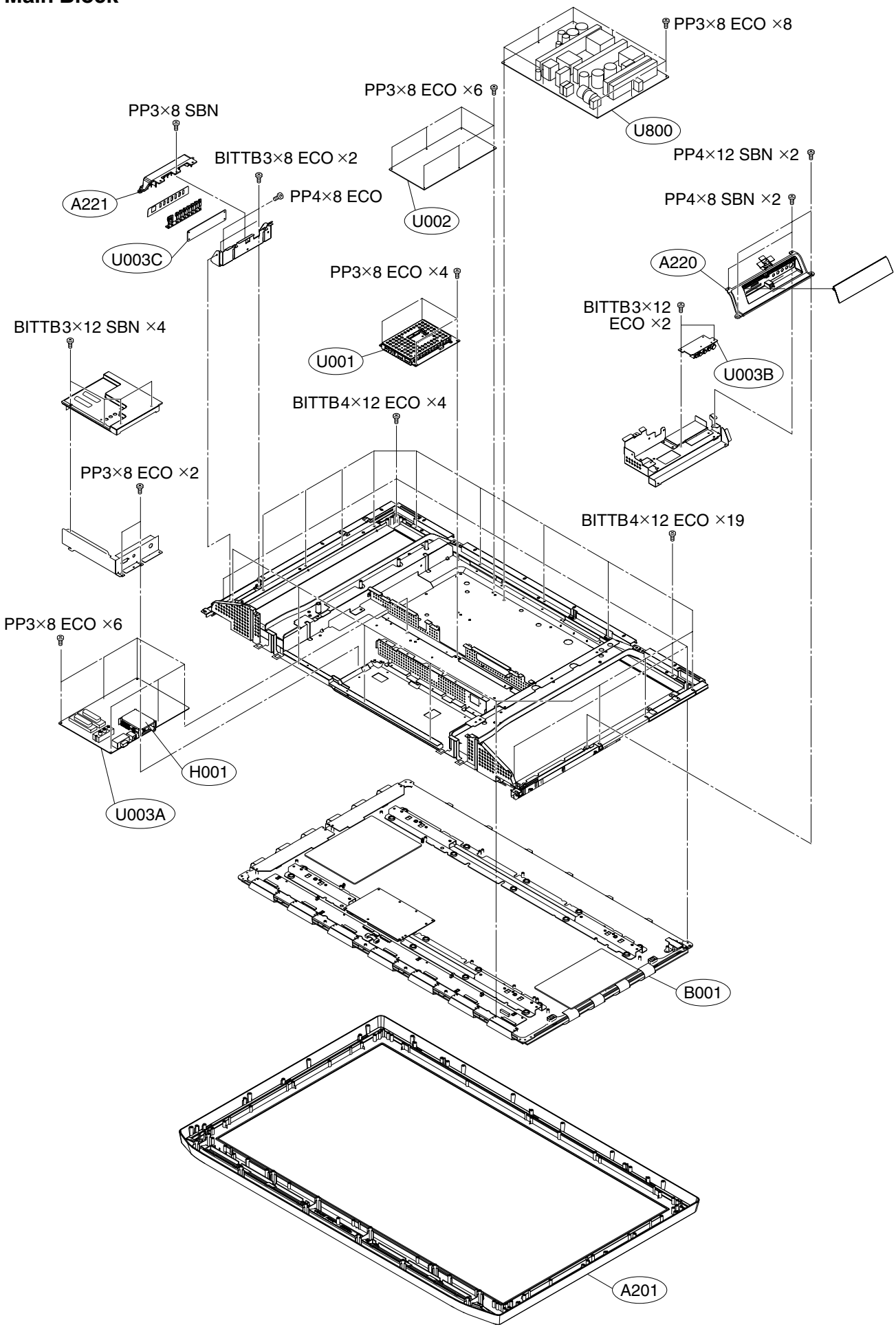
PP3×8 ECO ×8
U800
PP3×8 ECO ×6
U002
PP3×8 SBN
A221
BITTB3×8 ECO ×2
PP4×8 ECO
U003C
PP4×12 SBN ×2
PP4×8 SBN ×2
A220
PP3×8 ECO ×4
U001
BITTB3×12 ECO ×2
U003B
BITTB3×12 SBN ×4
BITTB4×12 ECO ×4
PP3×8 ECO ×2
BITTB4×12 ECO ×19
PP3×8 ECO ×6
H001
U003A
B001
A201

PACKING DISASSEMBLY

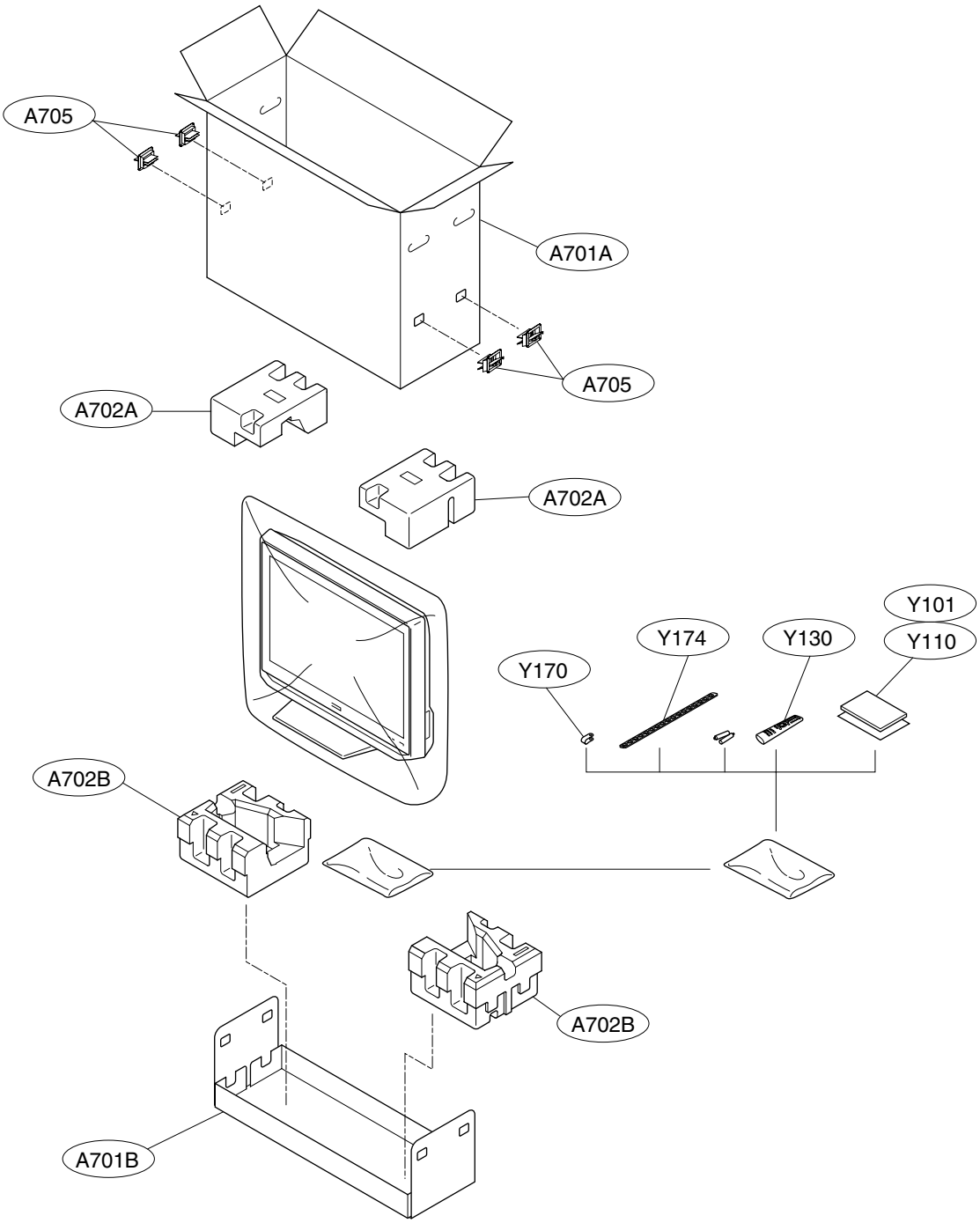

CHASSIS AND CABINET REPLACEMENT PARTS LIST

WARNING: BEFORE SERVICING THIS CHASSIS, READ THE "SERVICE SAFETY PRECAUTIONS" ON PAGE 3 OF THIS MANUAL.

CAUTION: The international hazard symbols "⚠" in the schematic diagram and the parts list designate components which have special characteristics important for safety and should be replaced only with types identical to those in the original circuit or specified in the parts list. The mounting position of replacements is to be identical with originals. Before replacing any of these components, read carefully the SERVICE SAFETY PRECAUTIONS. Do not degrade the safety of the receiver through improper servicing.

NOTICE:
- *The part number must be used when ordering parts, in order to assist in processing, be sure to include the Model number and Description.*
- *The PC board assembly with * mark is no longer available after the end of the production.*

Model : 42WP56P

Capacitors	CD	:	Ceramic Disk	PF	:	Plastic Film	EL	: Electrolytic
Resistors	CF	:	Carbon Film	CC	:	Carbon Composition	MF	: Metal Film
	OMF	:	Oxide Metal Film	VR	:	Variable Resistor	FR	: Fusible Resistor

(All CD and PF capacitors are ±5%, 50V and all resistors, ±5%, 1/6W unless otherwise noted.)

Location No.	Parts No.	Description
CAPACITORS		
⚠C101	76109103	CERAMIC CHIP, 50V B 0.01UF K
⚠C102	76073019	ELECTROLYTIC, 10V 470UF M 3A
⚠C103	76109102	CERAMIC CHIP, 50V B 1000PF K
⚠C104	76619143	ELECTROLYTIC CHIP, 50V 4.7UF M
C105	76073019	ELECTROLYTIC, 10V 470UF M 3A
C117	76109103	CERAMIC CHIP, 50V B 0.01UF K
C118	76109103	CERAMIC CHIP, 50V B 0.01UF K
C162	76105101	CERAMIC CHIP, 50V CH 100PF J
C164	76100103	CERAMIC CHIP, 50V F 0.01UF Z
C190	76092730	CERAMIC CHIP, 16V B 0.1UF K
C501	76100104	CERAMIC CHIP, 25V F 0.1UF Z
C502	76100104	CERAMIC CHIP, 25V F 0.1UF Z
C503	76619046	ELECTROLYTIC CHIP, 16V 470UF
C504	76109103	CERAMIC CHIP, 50V B 0.01UF K
C505	76619046	ELECTROLYTIC CHIP, 16V 470UF
C506	76109103	CERAMIC CHIP, 50V B 0.01UF K
C514	76665221	ELECTROLYTIC, 10V 220UF M 3A
C516	76105110	CERAMIC CHIP, 50V CH 11PF J
C517	76092785	CERAMIC CHIP, 10V B 0.47UF K
C519	76619048	ELECTROLYTIC CHIP, 25V 4.7UF M
C521	76092733	CERAMIC CHIP, 50V B 0.022UF K
C524	76109103	CERAMIC CHIP, 50V B 0.01UF K
C526	76109103	CERAMIC CHIP, 50V B 0.01UF K
C527	76619071	ELECTROLYTIC CHIP, 50V 2.2UF
C529	76100104	CERAMIC CHIP, 25V F 0.1UF Z
C530	76619157	ELECTROLYTIC CHIP, 16V 100UF
C605	76109102	CERAMIC CHIP, 50V B 1000PF K
C606	76109102	CERAMIC CHIP, 50V B 1000PF K
C612	76664102	ELECTROLYTIC, 6.3V 1000UF M 3A
C631	76619102	ELECTROLYTIC CHIP, 16V 47UF M
C632	76092731	CERAMIC CHIP, 16V B 1UF K
C651	76092463	CERAMIC CHIP, 16V B 0.22UF K
C652	76092463	CERAMIC CHIP, 16V B 0.22UF K
C653	76092538	CERAMIC CHIP, 10V F 1UF Z
C662	76109102	CERAMIC CHIP, 50V B 1000PF K
C663	76619100	ELECTROLYTIC CHIP, 16V 10UF M
C665	76669339	ELECTROLYTIC, 50V 3.3UF M
C666	76669339	ELECTROLYTIC, 50V 3.3UF M
C668	76073086	ELECTROLYTIC, 50V 10UF M 3A
C671	76669479	ELECTROLYTIC, 50V 4.7UF M
C674	76669479	ELECTROLYTIC, 50V 4.7UF M
C677	76109681	CERAMIC CHIP, 50V B 680PF K
C678	76109681	CERAMIC CHIP, 50V B 680PF K

Location No.	Parts No.	Description
C680	76668102	ELECTROLYTIC, 35V 1000UF M 3A
C681	76668102	ELECTROLYTIC, 35V 1000UF M 3A
C682	76668102	ELECTROLYTIC, 35V 1000UF M 3A
C690	76815103	CERAMIC CHIP, 50V B 0.01UF K
C694	76285104	CERAMIC CHIP, 50V B 0.1UF K
C696	76285104	CERAMIC CHIP, 50V B 0.1UF K
C1801	76285104	CERAMIC CHIP, 50V B 0.1UF K
C1802	76109103	CERAMIC CHIP, 50V B 0.01UF K
C1803	76109103	CERAMIC CHIP, 50V B 0.01UF K
C1804	76109103	CERAMIC CHIP, 50V B 0.01UF K
C1805	76109103	CERAMIC CHIP, 50V B 0.01UF K
C1806	76109103	CERAMIC CHIP, 50V B 0.01UF K
C1807	76109103	CERAMIC CHIP, 50V B 0.01UF K
C1808	76109103	CERAMIC CHIP, 50V B 0.01UF K
C6605	76766100	ELECTROLYTIC, 50V 10UF M
CB01	76202221	ELECTROLYTIC, 10V 220UF M 7L 3A
CB02	76202221	ELECTROLYTIC, 10V 220UF M 7L 3A
CB03	76100104	CERAMIC CHIP, 25V F 0.1UF Z
CB04	76100104	CERAMIC CHIP, 25V F 0.1UF Z
CB05	76202221	ELECTROLYTIC, 10V 220UF M 7L 3A
CB38	76100104	CERAMIC CHIP, 25V F 0.1UF Z
CC11	76109102	CERAMIC CHIP, 50V B 1000PF K
CC12	76109102	CERAMIC CHIP, 50V B 1000PF K
CC31	76109102	CERAMIC CHIP, 50V B 1000PF K
CC40	76109102	CERAMIC CHIP, 50V B 1000PF K
CC41	76109102	CERAMIC CHIP, 50V B 1000PF K
CC60	76109102	CERAMIC CHIP, 50V B 1000PF K
CC61	76109102	CERAMIC CHIP, 50V B 1000PF K
CC62	76109102	CERAMIC CHIP, 50V B 1000PF K
CC63	76109102	CERAMIC CHIP, 50V B 1000PF K
CC64	76109102	CERAMIC CHIP, 50V B 1000PF K
CC65	76109102	CERAMIC CHIP, 50V B 1000PF K
CC66	76109102	CERAMIC CHIP, 50V B 1000PF K
CC67	76109102	CERAMIC CHIP, 50V B 1000PF K
CC74	76109102	CERAMIC CHIP, 50V B 1000PF K
CC75	76109102	CERAMIC CHIP, 50V B 1000PF K
CE03	76539104	PLASTIC FILM, 50V 0.1UF J
CE05	76073090	ELECTROLYTIC, 50V 100UF M 3A
CE10	76666470	ELECTORLYTIC, 16V 47UF M 3A
CE11	76539474	PLASTIC FILM, 50V 0.47UF J
CE12	76666470	ELECTORLYTIC, 16V 47UF M 3A
CE60	76073186	ELECTROLYTIC, 35V 470UF M
CE61	76617028	ELECTROLYTIC, 16V 1200UF M
CE62	76073020	ELECTROLYTIC, 10V 1000UF M 3A

Location No.	Parts No.	Description
CE63	76539104	PLASTIC FILM, 50V 0.1UF J
CE64	76539104	PLASTIC FILM, 50V 0.1UF J
CE65	76666470	ELECTORLYTIC, 16V 47UF M 3A
CE66	76539474	PLASTIC FILM, 50V 0.47UF J
CE67	76666470	ELECTORLYTIC, 16V 47UF M 3A
CE85	76666470	ELECTORLYTIC, 16V 47UF M 3A
CT01	76092790	CERAMIC CHIP CK732B 6.3V 10UF K
CT04	76105151	CERAMIC CHIP, 50V CH 150PF J
CT05	76092790	CERAMIC CHIP CK732B 6.3V 10UF K
CT06	76092790	CERAMIC CHIP CK732B 6.3V 10UF K
CT07	76092790	CERAMIC CHIP CK732B 6.3V 10UF K
CT08	76100104	CERAMIC CHIP, 25V F 0.1UF Z
CT09	76109103	CERAMIC CHIP, 50V B 0.01UF K
CV02	76100104	CERAMIC CHIP, 25V F 0.1UF Z
CV03	76100104	CERAMIC CHIP, 25V F 0.1UF Z
CV13	76100104	CERAMIC CHIP, 25V F 0.1UF Z
CV17	76092731	CERAMIC CHIP, 16V B 1UF K
CV19	76619157	ELECTROLYTIC CHIP, 16V 100UF
CV20	76100104	CERAMIC CHIP, 25V F 0.1UF Z
CV21	76100104	CERAMIC CHIP, 25V F 0.1UF Z
CV22	76619157	ELECTROLYTIC CHIP, 16V 100UF
CV23	76619042	ELECTROLYTIC CHIP, 16V 22UF M 3A
CV24	76092731	CERAMIC CHIP, 16V B 1UF K
CV25	76092731	CERAMIC CHIP, 16V B 1UF K
CV26	76619042	ELECTROLYTIC CHIP, 16V 22UF M 3A
CV27	76619157	ELECTROLYTIC CHIP, 16V 100UF
CV28	76619042	ELECTROLYTIC CHIP, 16V 22UF M 3A
CV51	76619100	ELECTROLYTIC CHIP, 16V 10UF M
CV52	76619100	ELECTROLYTIC CHIP, 16V 10UF M
CV54	76619100	ELECTROLYTIC CHIP, 16V 10UF M
CV55	76619100	ELECTROLYTIC CHIP, 16V 10UF M
CV56	76619157	ELECTROLYTIC CHIP, 16V 100UF
CV57	76619157	ELECTROLYTIC CHIP, 16V 100UF
CV58	76619157	ELECTROLYTIC CHIP, 16V 100UF
CV59	76619157	ELECTROLYTIC CHIP, 16V 100UF
CV60	76619157	ELECTROLYTIC CHIP, 16V 100UF
CV62	76100104	CERAMIC CHIP, 25V F 0.1UF Z
CV63	76100104	CERAMIC CHIP, 25V F 0.1UF Z
CV91	76100104	CERAMIC CHIP, 25V F 0.1UF Z
CV121	76109103	CERAMIC CHIP, 50V B 0.01UF K
CV122	76105101	CERAMIC CHIP, 50V CH 100PF J
CY650	76109103	CERAMIC CHIP, 50V B 0.01UF K
RESISTORS		
R103	76011101	CHIP, 1/20W 100 OHM J
R104	76011103	CHIP, 1/20W 10K OHM J
R105	76011273	CHIP, 1/20W 27K OHM J
R107	76000445	CHIP JUMPER, 1608TYPE
R108	76000445	CHIP JUMPER, 1608TYPE
R114	76000445	CHIP JUMPER, 1608TYPE
R167	76011101	CHIP, 1/20W 100 OHM J
R169	76000445	CHIP JUMPER, 1608TYPE
R170	76011682	CHIP, 1/20W 6.8K OHM J
R501	76011682	CHIP, 1/20W 6.8K OHM J
R502	76011272	CHIP, 1/20W 2.7K OHM J
R504	76011101	CHIP, 1/20W 100 OHM J
R505	76011101	CHIP, 1/20W 100 OHM J
R506	76011273	CHIP, 1/20W 27K OHM J
R507	76011392	CHIP, 1/20W 3.9K OHM J
R508	76011682	CHIP, 1/20W 6.8K OHM J
R512	76011101	CHIP, 1/20W 100 OHM J
R514	76011102	CHIP, 1/20W 1K OHM J
R650	76011102	CHIP, 1/20W 1K OHM J
R651	76011473	CHIP, 1/20W 47K OHM J
R652	76011103	CHIP, 1/20W 10K OHM J
R653	76011223	CHIP, 1/20W 22K OHM J
R654	76011103	CHIP, 1/20W 10K OHM J
R655	76011222	CHIP, 1/20W 2.2K OHM J
R660	76011473	CHIP, 1/20W 47K OHM J

Location No.	Parts No.	Description
R662	76011103	CHIP, 1/20W 10K OHM J
R663	76011473	CHIP, 1/20W 47K OHM J
R664	76011104	CHIP, 1/20W 100K OHM J
R667	76011104	CHIP, 1/20W 100K OHM J
R670	76011472	CHIP, 1/20W 4.7K OHM J
R671	76011182	CHIP, 1/20W 1.8K OHM J
R672	76011472	CHIP, 1/20W 4.7K OHM J
R673	76011182	CHIP, 1/20W 1.8K OHM J
R675	76011102	CHIP, 1/20W 1K OHM J
R676	76011473	CHIP, 1/20W 47K OHM J
R677	76011473	CHIP, 1/20W 47K OHM J
R684	76871229	CHIP, 1/8W 2.2 OHM J
R685	76871229	CHIP, 1/8W 2.2 OHM J
R687	76871102	CHIP, 1/8W 1K OHM J
R688	76871102	CHIP, 1/8W 1K OHM J
R689	76871102	CHIP, 1/8W 1K OHM J
R690	76871102	CHIP, 1/8W 1K OHM J
R691	76871102	CHIP, 1/8W 1K OHM J
R692	76871102	CHIP, 1/8W 1K OHM J
R697	76000576	CHIP JUMPER, 3216TYPE
R4100	76011102	CHIP, 1/20W 1K OHM J
R4101	76011681	CHIP, 1/20W 680 OHM J
R4102	76011471	CHIP, 1/20W 470 OHM J
R4103	76011102	CHIP, 1/20W 1K OHM J
R4104	76011152	CHIP, 1/20W 1.5K OHM J
R4105	76011102	CHIP, 1/20W 1K OHM J
R4106	76011681	CHIP, 1/20W 680 OHM J
R4107	76011471	CHIP, 1/20W 470 OHM J
R4108	76011102	CHIP, 1/20W 1K OHM J
R4109	76011152	CHIP, 1/20W 1.5K OHM J
R4120	76000445	CHIP JUMPER, 1608TYPE
R4122	76000445	CHIP JUMPER, 1608TYPE
R6603	76011223	CHIP, 1/20W 22K OHM J
R6605	76011103	CHIP, 1/20W 10K OHM J
R6606	76011104	CHIP, 1/20W 100K OHM J
R6610	76011102	CHIP, 1/20W 1K OHM J
R6611	76011102	CHIP, 1/20W 1K OHM J
R6612	76011104	CHIP, 1/20W 100K OHM J
R6613	76011104	CHIP, 1/20W 100K OHM J
R6614	76011103	CHIP, 1/20W 10K OHM J
R6615	76011102	CHIP, 1/20W 1K OHM J
R6616	76011104	CHIP, 1/20W 100K OHM J
R6617	76011104	CHIP, 1/20W 100K OHM J
R6631	76011473	CHIP, 1/20W 47K OHM J
R6632	76011473	CHIP, 1/20W 47K OHM J
R6634	76011102	CHIP, 1/20W 1K OHM J
RA71	76011683	CHIP, 1/20W 68K OHM J
RA72	76011223	CHIP, 1/20W 22K OHM J
RA73	76011103	CHIP, 1/20W 10K OHM J
RA74	76000445	CHIP JUMPER, 1608TYPE
RA77	76011103	CHIP, 1/20W 10K OHM J
RA78	76000445	CHIP JUMPER, 1608TYPE
RA79	76000445	CHIP JUMPER, 1608TYPE
RB08	76011470	CHIP, 1/20W 47 OHM J
RB09	76011470	CHIP, 1/20W 47 OHM J
RB10	76011331	CHIP, 1/20W 330 OHM J
RB15	76011471	CHIP, 1/20W 470 OHM J
RB24	76000445	CHIP JUMPER, 1608TYPE
RC01	76011101	CHIP, 1/20W 100 OHM J
RC02	76011101	CHIP, 1/20W 100 OHM J
RC03	76011101	CHIP, 1/20W 100 OHM J
RC04	76011101	CHIP, 1/20W 100 OHM J
RC11	76011101	CHIP, 1/20W 100 OHM J
RC12	76011101	CHIP, 1/20W 100 OHM J
RC40	76011101	CHIP, 1/20W 100 OHM J
RC41	76011101	CHIP, 1/20W 100 OHM J
RE04	76366222	CARBON FILM, 1/6W 2.2K OHM J
RE06	76366473	CARBON FILM, 1/6W 47K OHM J
RE10	76367180	CARBON FILM, 1/6W 18 OHM G

Location No.	Parts No.	Description
RE11	76367222	CARBON FILM, 1/6W 2.2K OHM G
RE12	76366472	CARBON FILM, 1/6W 4.7K OHM J
RE13	76366102	CARBON FILM, 1/6W 1K OHM J
RE15	76366182	CARBON FILM, 1/6W 1.8K OHM J
RE16	76366473	CARBON FILM, 1/6W 47K OHM J
RE17	76366103	CARBON FILM, 1/6W 10K OHM J
RE18	76366153	CARBON FILM, 1/6W 15K OHM J
RE19	76366473	CARBON FILM, 1/6W 47K OHM J
RE60	76000142	METAL FILM, 1/4W 240 OHM F
RE61	76000360	METAL FILM, 1/4W 1.2K OHM F
RE63	76366102	CARBON FILM, 1/6W 1K OHM J
RE65	76367620	CARBON FILM 1/6W 62 G
RE66	76367222	CARBON FILM, 1/6W 2.2K OHM G
RE85	76552222	OXIDE METAL FILM, 1/2W 2.2K OHM J
RE86	76366103	CARBON FILM, 1/6W 10K OHM J
RR01	76871750	CHIP, 1/8W 75 OHM J
RR02	76871750	CHIP, 1/8W 75 OHM J
RR03	76871750	CHIP, 1/8W 75 OHM J
RR04	76011330	CHIP, 1/20W 33 OHM J
RR05	76011330	CHIP, 1/20W 33 OHM J
RR06	76011330	CHIP, 1/20W 33 OHM J
RS23	76011104	CHIP, 1/20W 100K OHM J
RS24	76011104	CHIP, 1/20W 100K OHM J
RS25	76011104	CHIP, 1/20W 100K OHM J
RS26	76011104	CHIP, 1/20W 100K OHM J
RT01	76011101	CHIP, 1/20W 100 OHM J
RT02	76011273	CHIP, 1/20W 27K OHM J
RT03	76011683	CHIP, 1/20W 68K OHM J
RT04	76011102	CHIP, 1/20W 1K OHM J
RT05	76011101	CHIP, 1/20W 100 OHM J
RT06	76011391	CHIP, 1/20W 390 OHM J
RT07	76011821	CHIP, 1/20W 820 OHM J
RT08	76011151	CHIP, 1/20W 150 OHM J
RT09	76011471	CHIP, 1/20W 470 OHM J
RT10	76011101	CHIP, 1/20W 100 OHM J
RT11	76011471	CHIP, 1/20W 470 OHM J
RT12	76011102	CHIP, 1/20W 1K OHM J
RV02	76872750	CHIP, 1/16W 75 OHM J
RV03	76872151	CHIP, 1/16W 150 OHM J
RV04	76872151	CHIP, 1/16W 150 OHM J
RV05	76872750	CHIP, 1/16W 75 OHM J
RV06	76872750	CHIP, 1/16W 75 OHM J
RV07	76872750	CHIP, 1/16W 75 OHM J
RV13	76872750	CHIP, 1/16W 75 OHM J
RV21	76872750	CHIP, 1/16W 75 OHM J
RV28	76872750	CHIP, 1/16W 75 OHM J
RV30	76872750	CHIP, 1/16W 75 OHM J
RV31	76872750	CHIP, 1/16W 75 OHM J
RV32	76872680	CHIP, 1/16W 68 OHM J
RV51	76011101	CHIP, 1/20W 100 OHM J
RV52	76871181	CHIP, 1/8W 180 OHM J
RV54	76011473	CHIP, 1/20W 47K OHM J
RV55	76011473	CHIP, 1/20W 47K OHM J
RV56	76011473	CHIP, 1/20W 47K OHM J
RV57	76011101	CHIP, 1/20W 100 OHM J
RV58	76871181	CHIP, 1/8W 180 OHM J
RV59	76011473	CHIP, 1/20W 47K OHM J
RV71	76011470	CHIP, 1/20W 47 OHM J
RV72	76011470	CHIP, 1/20W 47 OHM J
RV73	76011470	CHIP, 1/20W 47 OHM J
RV74	76011470	CHIP, 1/20W 47 OHM J
RV76	76011473	CHIP, 1/20W 47K OHM J
RV78	76011101	CHIP, 1/20W 100 OHM J
RV79	76871181	CHIP, 1/8W 180 OHM J
RV80	76011473	CHIP, 1/20W 47K OHM J
RV81	76011473	CHIP, 1/20W 47K OHM J
RV82	76871181	CHIP, 1/8W 180 OHM J
RV84	76011101	CHIP, 1/20W 100 OHM J
RV85	76011473	CHIP, 1/20W 47K OHM J

Location No.	Parts No.	Description
RV90	76366750	CARBON FILM, 1/6W 75 OHM J
RV90A	23965241	TAPE, CC #12 10MM L30M
RV91	76366750	CARBON FILM, 1/6W 75 OHM J
RV92	76011103	CHIP, 1/20W 10K OHM J
RV93	76011392	CHIP, 1/20W 3.9K OHM J
RV94	76011103	CHIP, 1/20W 10K OHM J
RV95	76011392	CHIP, 1/20W 3.9K OHM J
RV121	76872750	CHIP, 1/16W 75 OHM J
RV129	76011101	CHIP, 1/20W 100 OHM J
RV251	76011101	CHIP, 1/20W 100 OHM J
RV252	76011102	CHIP, 1/20W 1K OHM J
RV253	76011392	CHIP, 1/20W 3.9K OHM J
RV254	76011432	CHIP, 1/20W 4.3K OHM J
RV255	76011102	CHIP, 1/20W 1K OHM J
RV256	76011152	CHIP, 1/20W 1.5K OHM J
RV257	76011102	CHIP, 1/20W 1K OHM J
RV258	76011101	CHIP, 1/20W 100 OHM J
RV259	76011222	CHIP, 1/20W 2.2K OHM J
RV260	76011101	CHIP, 1/20W 100 OHM J

COIL & TRANSFORMERS

L101	23248398	COIL, CHOKE, TLN3278D
L102	23103828	INDUCTOR, BEAD, TEM2121M
⚠L103	23103828	INDUCTOR, BEAD, TEM2121M
⚠L104	23103828	INDUCTOR, BEAD, TEM2121M
L105	23277002	FERRITE CORE, ACM3225-102-2PT100
L190	23103828	INDUCTOR, BEAD, TEM2121M
L505	23289022	COIL, PEAKING, TRF4100AT
LC01	23103828	INDUCTOR, BEAD, TEM2121M
LC02	23103828	INDUCTOR, BEAD, TEM2121M
LC03	23103828	INDUCTOR, BEAD, TEM2121M
LC04	23103828	INDUCTOR, BEAD, TEM2121M
LC05	23103828	INDUCTOR, BEAD, TEM2121M
LC06	23103828	INDUCTOR, BEAD, TEM2121M
LC21	23103828	INDUCTOR, BEAD, TEM2121M
LC22	23103828	INDUCTOR, BEAD, TEM2121M
LC23	23103828	INDUCTOR, BEAD, TEM2121M
LC24	23103828	INDUCTOR, BEAD, TEM2121M
LC27	23103828	INDUCTOR, BEAD, TEM2121M
LC28	23103828	INDUCTOR, BEAD, TEM2121M
LC29	23103828	INDUCTOR, BEAD, TEM2121M
LC30	23103828	INDUCTOR, BEAD, TEM2121M
LC31	23103238	INDUCTOR, BEAD, TEM2142AD
LC32	23103238	INDUCTOR, BEAD, TEM2142AD
LC33	23103238	INDUCTOR, BEAD, TEM2142AD
LE10	23289980	COIL, PEAKING, TRF4220AZ
LE60	23248456	COIL, CHOKE, TLN3540AH
LE61	23289980	COIL, PEAKING, TRF4220AZ
LE62	23248432	COIL, CHOKE, TLN3499AH
LT01	23289028	COIL, PEAKING, TRF4101AT
LV17	23277002	FERRITE CORE, ACM3225-102-2PT100
LV21	23277002	FERRITE CORE, ACM3225-102-2PT100
LV22	23277002	FERRITE CORE, ACM3225-102-2PT100
LV23	23277002	FERRITE CORE, ACM3225-102-2PT100
LV24	23277002	FERRITE CORE, ACM3225-102-2PT100
LV25	23277002	FERRITE CORE, ACM3225-102-2PT100
LV26	23277002	FERRITE CORE, ACM3225-102-2PT100
LV27	23277002	FERRITE CORE, ACM3225-102-2PT100
LV28	23277002	FERRITE CORE, ACM3225-102-2PT100
LV29	23277002	FERRITE CORE, ACM3225-102-2PT100
LV30	23277002	FERRITE CORE, ACM3225-102-2PT100
LV31	23277002	FERRITE CORE, ACM3225-102-2PT100
LV32	23277002	FERRITE CORE, ACM3225-102-2PT100
LV33	23277002	FERRITE CORE, ACM3225-102-2PT100
LV120	23277002	FERRITE CORE, ACM3225-102-2PT100
LV121	23277002	FERRITE CORE, ACM3225-102-2PT100
LV122	23277002	FERRITE CORE, ACM3225-102-2PT100

Location No.	Parts No.	Description
SEMICONDUCTORS		
Q101	23205506	TRANSISTOR, 2SC4081 Q
Q501	23085049	IC, TB1274BFG(DRY)
Q504	23205507	TRANSISTOR, 2SA1576A Q
Q610	23085039	IC, TA8246AHQ
Q612	23205443	TRANSISTOR, 2SA1162-Y(F)
Q621	23205506	TRANSISTOR, 2SC4081 Q
Q622	23205506	TRANSISTOR, 2SC4081 Q
Q654	23205302	TRANSISTOR, 2SC3326-B(F)
Q655	23205302	TRANSISTOR, 2SC3326-B(F)
Q656	23205325	TRANSISTOR, RN2404(F)
Q664	23205506	TRANSISTOR, 2SC4081 Q
Q665	23205325	TRANSISTOR, RN2404(F)
Q671	23205302	TRANSISTOR, 2SC3326-B(F)
Q672	23205302	TRANSISTOR, 2SC3326-B(F)
Q4100	23085635	TRANSISTOR, 2SC3437-Y(TE85L,F)
Q4101	23085635	TRANSISTOR, 2SC3437-Y(TE85L,F)
Q4102	23085635	TRANSISTOR, 2SC3437-Y(TE85L,F)
Q4103	23085635	TRANSISTOR, 2SC3437-Y(TE85L,F)
Q6601	23205302	TRANSISTOR, 2SC3326-B(F)
Q6602	23205302	TRANSISTOR, 2SC3326-B(F)
Q6603	23205325	TRANSISTOR, RN2404(F)
QB04	23205463	TRANSISTOR, 2SC2712-Y(TE85L,F)
QB07	23205463	TRANSISTOR, 2SC2712-Y(TE85L,F)
QE02	23205376	TRANSISTOR, 2SC5343-Y(BULK)
QE03	23205315	TRANSISTOR, RN1206(F)
QE04	23205376	TRANSISTOR, 2SC5343-Y(BULK)
QE10	23135077	IC, SI-3090CA
QE11	23205315	TRANSISTOR, RN1206(F)
QE60	23085381	IC, SI-8050SS
QE65	23135076	IC, SI-3050C
QE85	23205339	TRANSISTOR, 2SC2655-Y(F)
QT01	23205507	TRANSISTOR, 2SA1576A Q
QT02	23205506	TRANSISTOR, 2SC4081 Q
QT03	23205507	TRANSISTOR, 2SA1576A Q
QT04	23085392	IC, MM1501XN
QT05	23205507	TRANSISTOR, 2SA1576A Q
QT06	23205402	TRANSISTOR, DTC144EUA
QV14	23085791	IC, M1510XNRE
QV15	23085791	IC, M1510XNRE
QV16	23085791	IC, M1510XNRE
QV21	23205443	TRANSISTOR, 2SA1162-Y(F)
QV22	23085635	TRANSISTOR, 2SC3437-Y(TE85L,F)
QV23	23085635	TRANSISTOR, 2SC3437-Y(TE85L,F)
QV24	23205506	TRANSISTOR, 2SC4081 Q
QV51	23205506	TRANSISTOR, 2SC4081 Q
QV52	23205506	TRANSISTOR, 2SC4081 Q
QV54	23205506	TRANSISTOR, 2SC4081 Q
QV55	23205506	TRANSISTOR, 2SC4081 Q
D607	23357802	DIODE, ZENER, MA8330-M
D612	23357703	DIODE, 1SS355
D613	23357703	DIODE, 1SS355
D640	23357703	DIODE, 1SS355
D641	23357703	DIODE, 1SS355
D674	23357703	DIODE, 1SS355
D675	23357703	DIODE, 1SS355
D6601	23362140	DIODE, KDS160-RTK
D6602	23362140	DIODE, KDS160-RTK
DB01	23358606	DIODE, LED RED, SLR-56VC3FPQ
DB04	23358605	DIODE, LED GREEN, SLR-56MC3FPQR
DB20	23357406	DIODE, ZENER, UDZS5.6B
DB22	23357703	DIODE, 1SS355
DB23	23357703	DIODE, 1SS355
DE01	23357706	DIODE, AK04
DE02	23357706	DIODE, AK04
DE03	23357823	DIODE, ZENER, MTZJ3.6A
DE05	23357499	DIODE, ERB12-01
DE07	23357683	DIODE, ZENER, RD3.3ESA B1
DE60	23357810	DIODE, FMB-G14L

Location No.	Parts No.	Description
DE61	23357697	DIODE, 1SS133
DE62	23357845	DIODE, ZENER, MTZJ7.5B
DE85	23357861	DIODE, ZENER, MTZJ11A
DE86	23357697	DIODE, 1SS133
DE99	23357840	DIODE, ZENER, MTZJ6.2B
DV01	23357703	DIODE, 1SS355
DV02	23357703	DIODE, 1SS355
DV03	23357703	DIODE, 1SS355
DV04	23357703	DIODE, 1SS355
DV120	23357745	DIODE, ZENER, MA8056-M
MISCELLANEOUS		
B001	23301670	DISPLAY, PDP42V70440 PDP42V70440
B001A	23405525	OPTICAL FILTER, PDP42V T40 SSC PM00TZ001
B205	23533583	COVER, AV COVER ASSEMBLY 42WP56P
B213	23717219	SCREW, PP3X8+SW+W SBN
FE20	23144373	FUSE, RADIAL LEAD SUB-MINIATUR 250V 630MA
GC01	76000445	CHIP JUMPER, 1608TYPE
GC02	76000445	CHIP JUMPER, 1608TYPE
GJ413	76000445	CHIP JUMPER, 1608TYPE
GJ414	76000445	CHIP JUMPER, 1608TYPE
GR02	76000445	CHIP JUMPER, 1608TYPE
GR03	76000445	CHIP JUMPER, 1608TYPE
GR101	76000445	CHIP JUMPER, 1608TYPE
GR25	76000445	CHIP JUMPER, 1608TYPE
GR26	76000445	CHIP JUMPER, 1608TYPE
GR27	76000445	CHIP JUMPER, 1608TYPE
GR28	76000445	CHIP JUMPER, 1608TYPE
GR605	76000445	CHIP JUMPER, 1608TYPE
GR610	76000445	CHIP JUMPER, 1608TYPE
GR611	76000445	CHIP JUMPER, 1608TYPE
GRR01	76000445	CHIP JUMPER, 1608TYPE
GRR02	76000445	CHIP JUMPER, 1608TYPE
GRR03	76000445	CHIP JUMPER, 1608TYPE
GRR04	76011330	CHIP, 1/20W 33 OHM J
GRR05	76000445	CHIP JUMPER, 1608TYPE
GRR44	76000445	CHIP JUMPER, 1608TYPE
GRV01	76000445	CHIP JUMPER, 1608TYPE
GRV02	76000445	CHIP JUMPER, 1608TYPE
GRV03	76000445	CHIP JUMPER, 1608TYPE
GRV04	76000445	CHIP JUMPER, 1608TYPE
GRV05	76000445	CHIP JUMPER, 1608TYPE
GRV06	76000445	CHIP JUMPER, 1608TYPE
GRV30	76000445	CHIP JUMPER, 1608TYPE
GRV37	76000445	CHIP JUMPER, 1608TYPE
GRV38	76000445	CHIP JUMPER, 1608TYPE
GRV39	76000445	CHIP JUMPER, 1608TYPE
GRV40	76000445	CHIP JUMPER, 1608TYPE
GRV41	76000445	CHIP JUMPER, 1608TYPE
GRV42	76000445	CHIP JUMPER, 1608TYPE
GRV43	76000445	CHIP JUMPER, 1608TYPE
GRV46	76000445	CHIP JUMPER, 1608TYPE
GRV48	76000445	CHIP JUMPER, 1608TYPE
GRV49	76000445	CHIP JUMPER, 1608TYPE
GRV50	76000445	CHIP JUMPER, 1608TYPE
GRV51	76000445	CHIP JUMPER, 1608TYPE
GRV73	76000445	CHIP JUMPER, 1608TYPE
GRV74	76000445	CHIP JUMPER, 1608TYPE
GRV75	76000445	CHIP JUMPER, 1608TYPE
GT01	76000445	CHIP JUMPER, 1608TYPE
GT02	76000445	CHIP JUMPER, 1608TYPE
H001A	70352234	CLIP FINGER(97-605-01), HC-1651
KB01	23009710	REMOCON RECEIVER, GP1UE281RK
MJ22	23389359	CABLE, FFC 0.5 50P L70 GOLD
MJ60	23389359	CABLE, FFC 0.5 50P L70 GOLD
MZ01	23368939	CABLE, LVDS 600MM PDP1
P601A	23713938	CONNECTOR, CONNECTB5B-PH-K-S(LF)
P661	23023302	EARPHONE JACK
P662	23023302	EARPHONE JACK

Location No.	Parts No.	Description
⚠ P801	23372288	POWER CORD, BS 250V 5A 042512/8
⚠ P801	23372286	POWER CORD, CEE 250V 6A 042512/7
P801A	23103300	FERRITE CORE, TFE102AK, 32X41X14
P801B	23103778	FERRITE CORE, TFE1008
P801C	23974994	BAND, KESSOKU
P803A	23713763	PLUG, NP 2.5MM G, B12B-EH-F1A
P803B	23713763	PLUG, NP 2.5MM G, B12B-EH-F1A
P804A	23713757	PLUG, 6P 2.5MM G, B6B-EH-F1-TV4
P804B	23713757	PLUG, 6P 2.5MM G, B6B-EH-F1-TV4
P807A	23713763	PLUG, NP 2.5MM G, B12B-EH-F1A
P809A	23713762	PLUG, NP 2.5MM G, B11B-EH-F1A
P881	23023131	INLET, NOISE FILTER, GL-2080FVP-L
PH01	23902604	SOCKET, 21P
PH02	23902604	SOCKET, 21P
PJ21A	23713934	CONNECTOR, 2MM 3P S WHT B3B-PH-K-S(LF)
PJ22A	23757176	CONNECTOR, IRS 9637S-50Y902 GLD
PJ41B	23713943	CONNECTOR,CONNECTB11B-PH-K-S(LF)
PJ42B	23713948	CONNECTOR,CONNECTS6B-PH-K-S(LF)
PJ60A	23757176	CONNECTOR, IRS 9637S-50Y902 GLD
PP02	23845859	HOLDER, WIRE, PVC-C0AT, L=70MM
PP04	23974994	BAND, KESSOKU
PP05	23748085	WASHER, WASHER 10X4.2XT=0.3
PP07	23974994	BAND, KESSOKU
PP13	23845859	HOLDER, WIRE, PVC-C0AT, L=70MM
PV02	23023452	PINJACK3P,JPJ1874-810234AVJACK3PGREEN
PV25A	23713944	CONNECTOR,CONNECTB12B-PH-K-S(LF)
PV60	23365275	JACK, PHONO 3P V-L-R YKC21
PV61	23023300	JACK, Y/C YKF51-5560
PV90	23713710	SOCKET, D-SUB 15P, KRD-8622
Q610B	23717240	SCREW
QE10B	23717240	SCREW
SA01	23344507	SWITCH, PUSH, SKHHLMA010
SA02	23344507	SWITCH, PUSH, SKHHLMA010
SA03	23344507	SWITCH, PUSH, SKHHLMA010
SA04	23344507	SWITCH, PUSH, SKHHLMA010
SA05	23344507	SWITCH, PUSH, SKHHLMA010
SA06	23344507	SWITCH, PUSH, SKHHLMA010
SA07	23344507	SWITCH, PUSH, SKHHLMA010
⚠ U800	23122502	POWER UNIT, POWER BLOCK MODULE 1H276W
W661	23351320	SPEAKER, ASSY, 6X12 8-OHM 10W SPK-1468AO
W662	23351320	SPEAKER, ASSY, 6X12 8-OHM 10W SPK-1468AO
X501	23153612	CRYSTAL, 16.200 25PPM 25OHM
ZA01	23103778	FERRITE CORE, TFE1008
ZA02	23103839	FERRITE CORE, TFE1012
ZA07	23103840	FERRITE CORE, TFE1013
ZA08	23103778	FERRITE CORE, TFE1008
ZA09	23103840	FERRITE CORE, TFE1013

PC BOARD ASSEMBLIES

✻ U001	75001718	PC BOARD ASSY, PD2238H1 SIGNAL
✻ U002	75001713	PC BOARD ASSY, PD2202C1 LOWB
✻ U003A	75001714	PC BOARD ASSY, PD2206A1 TN/AV
✻ U003B	75001715	PC BOARD ASSY, PD2206A2 FRONT AV
✻ U003C	75001716	PC BOARD ASSY, PD2206A3 KEY
✻ U003D	75001717	PC BOARD ASSY, PD2206A4 RMT LED

TUNER

⚠ H001	23321543	TUNER, TIF EU HOR61 IEC PAL+L ENG37A13GF

ACCESSORIES

A701A	23015170	CARTON, TOP CASE 42WP56P
A701B	23015171	CARTON, BOTTOM CASE 42WP56P
A702A	23580038	PACKING, TOP PACKING 42WP56P
A702B	23580039	PACKING, BOTTOM PACKING 42WP56
A705	23518043	PACKING, JOINT
⚠ Y101	23566727	OWNERS MANUAL, ENGLISH 42WP56P
⚠	23566728	OWNERS MANUAL, EURO 42WP56P
Y110	23589767	QUICK SET UP GUIDE, 42WP56P
⚠ Y130	23306643	REMOCON HAND UNIT IR, PDPPAL CT-90126
Y170	23845800	HOLDER, WIRE, NYLON66 D6.8
Y174	23845510	BAND

CABINET PARTS

A201	23533585	COVER, FRONT BEZEL ASSY 42WP56P
A206	23469406	INSULATOR,INSULATOR
A220	23940488	PIECE, PIECE FRONT AV ASSY 42WP56P
A221	23940496	PIECE, PIECE CONTROL ASSY 42WP56P
A231	23717214	SCREW,BITTB3X12SBN
A235	23717177	SCREW, PP5X12+SW+W SBN
⚠ A401	23533556	COVER, BACK COVER ASSY
A403	23436887	FOOT, STAND ASSY
A410	23533616	COVER, CABLE COVER PROPER
A423	23717217	SCREW, PP6X35+SW+W SBN

SIGNAL BOARD PD2238H1 (U001)

BOTTOM (FOIL) SIDE

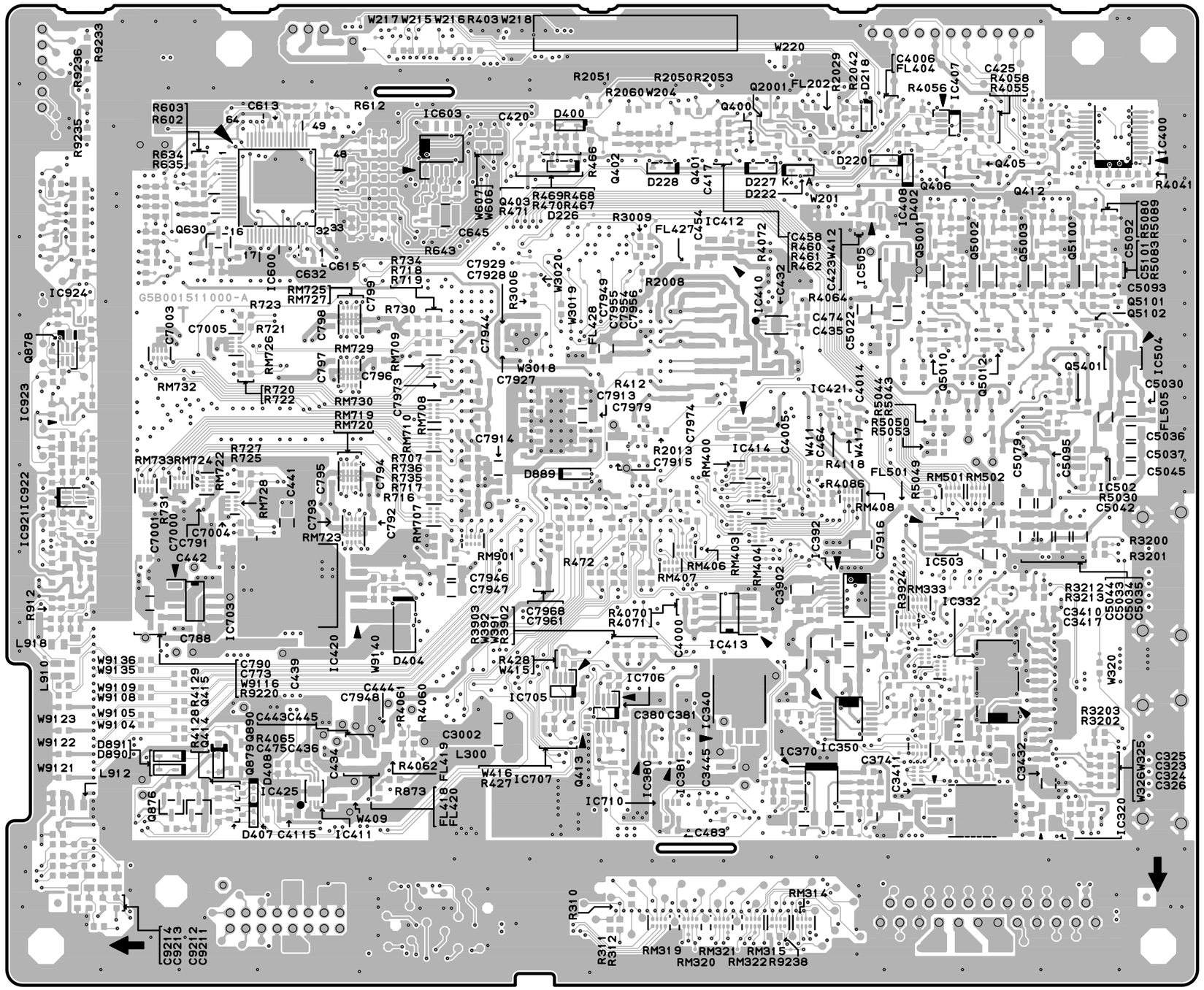

SIGNAL BOARD PD2238H1 (U001)

TOP (COMPONENT) SIDE

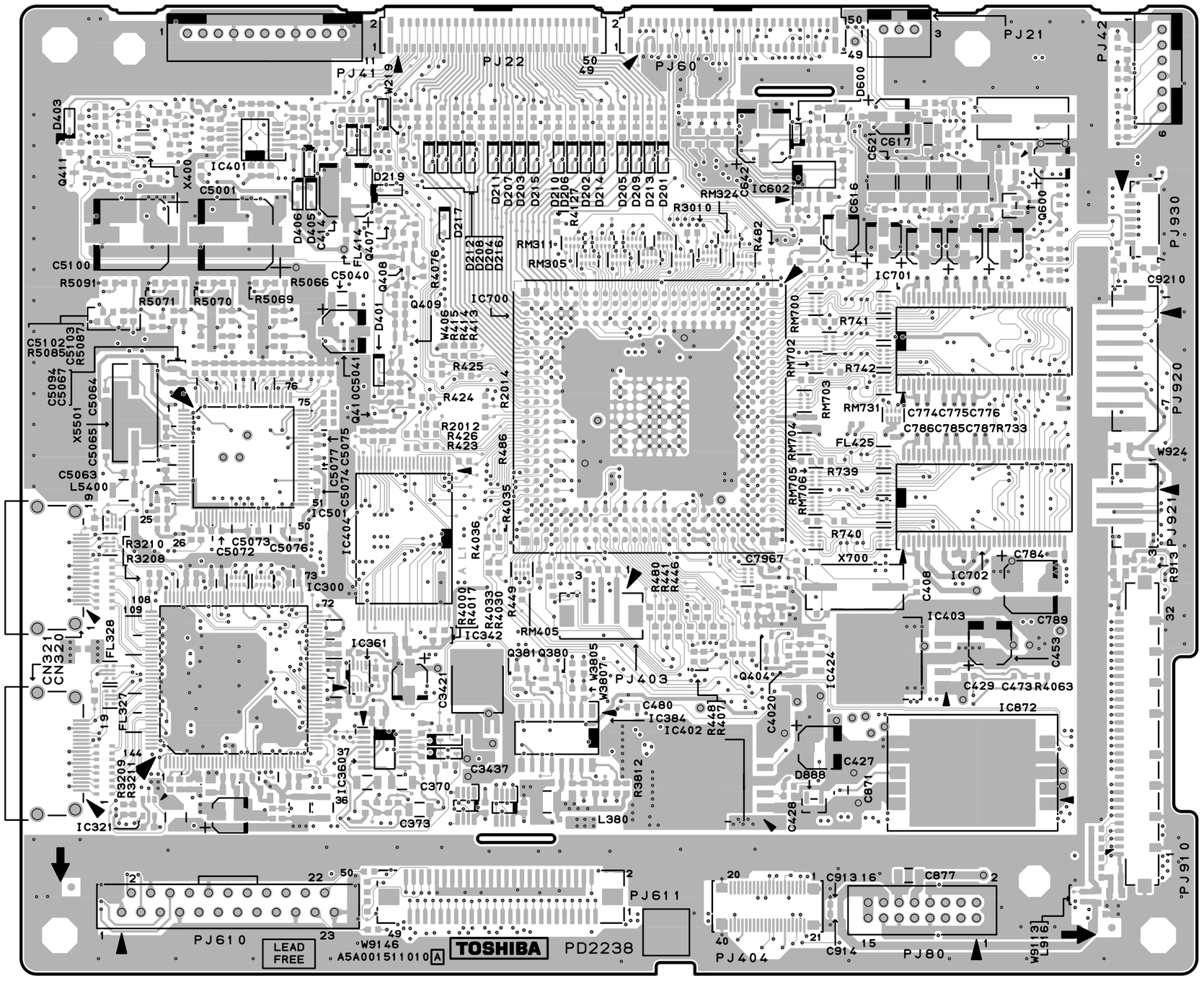

LOWB BOARD PD2202C1 (U002)

BOTTOM (FOIL) SIDE

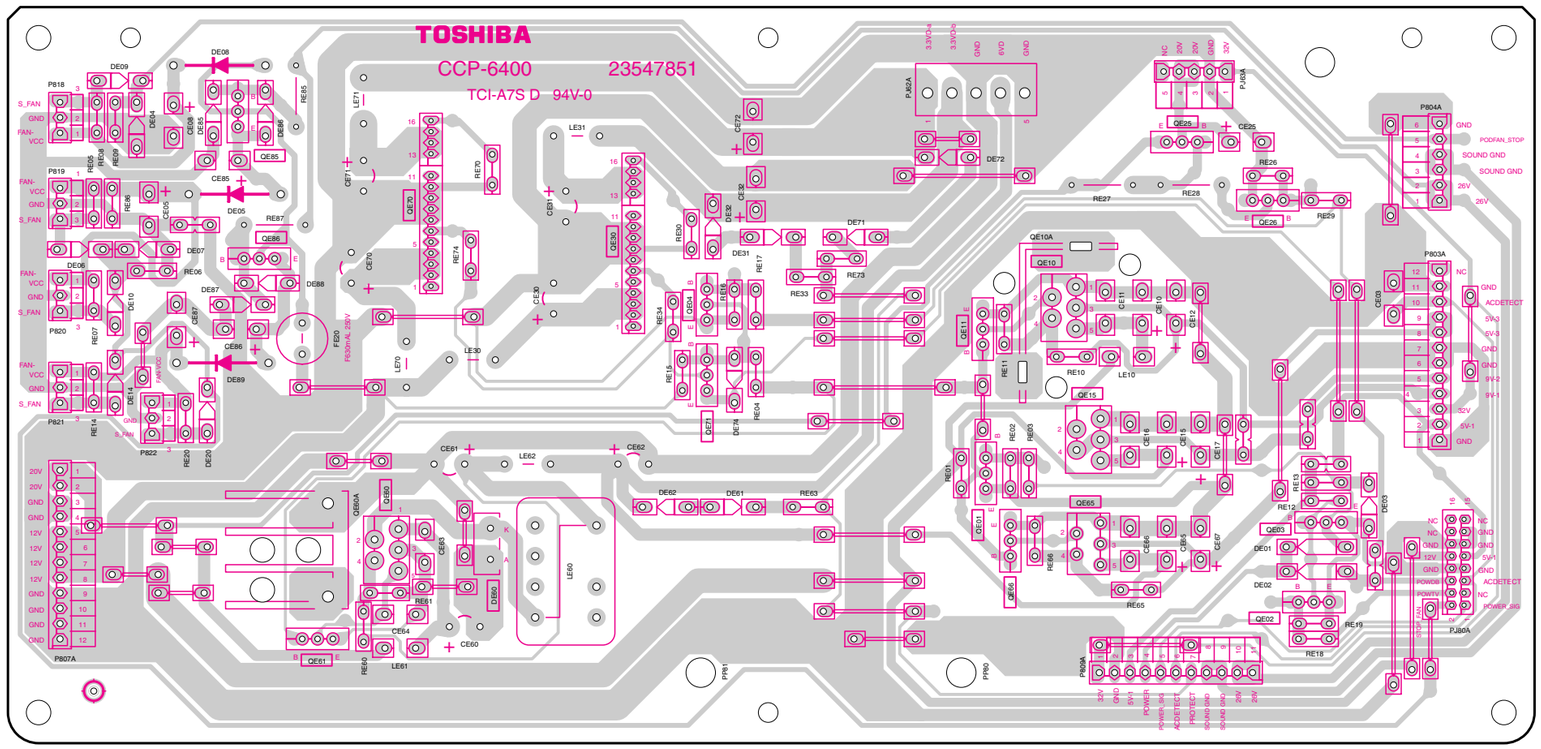

TN/AV BOARD PD2206A1 (U003A)

BOTTOM (FOIL) SIDE

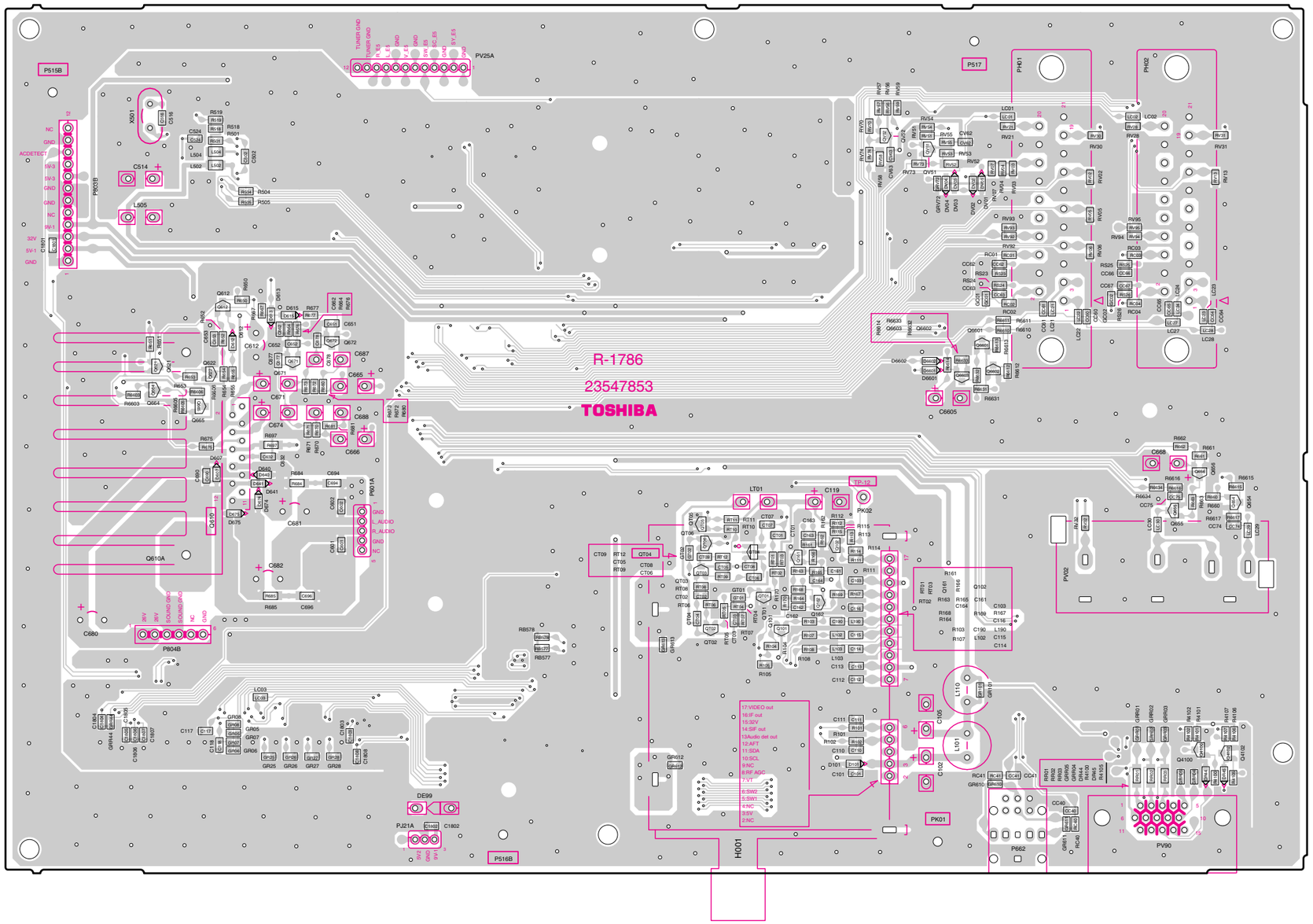

TN/AV BOARD PD2206A1 (U003A)

TOP (COMPONENT) SIDE

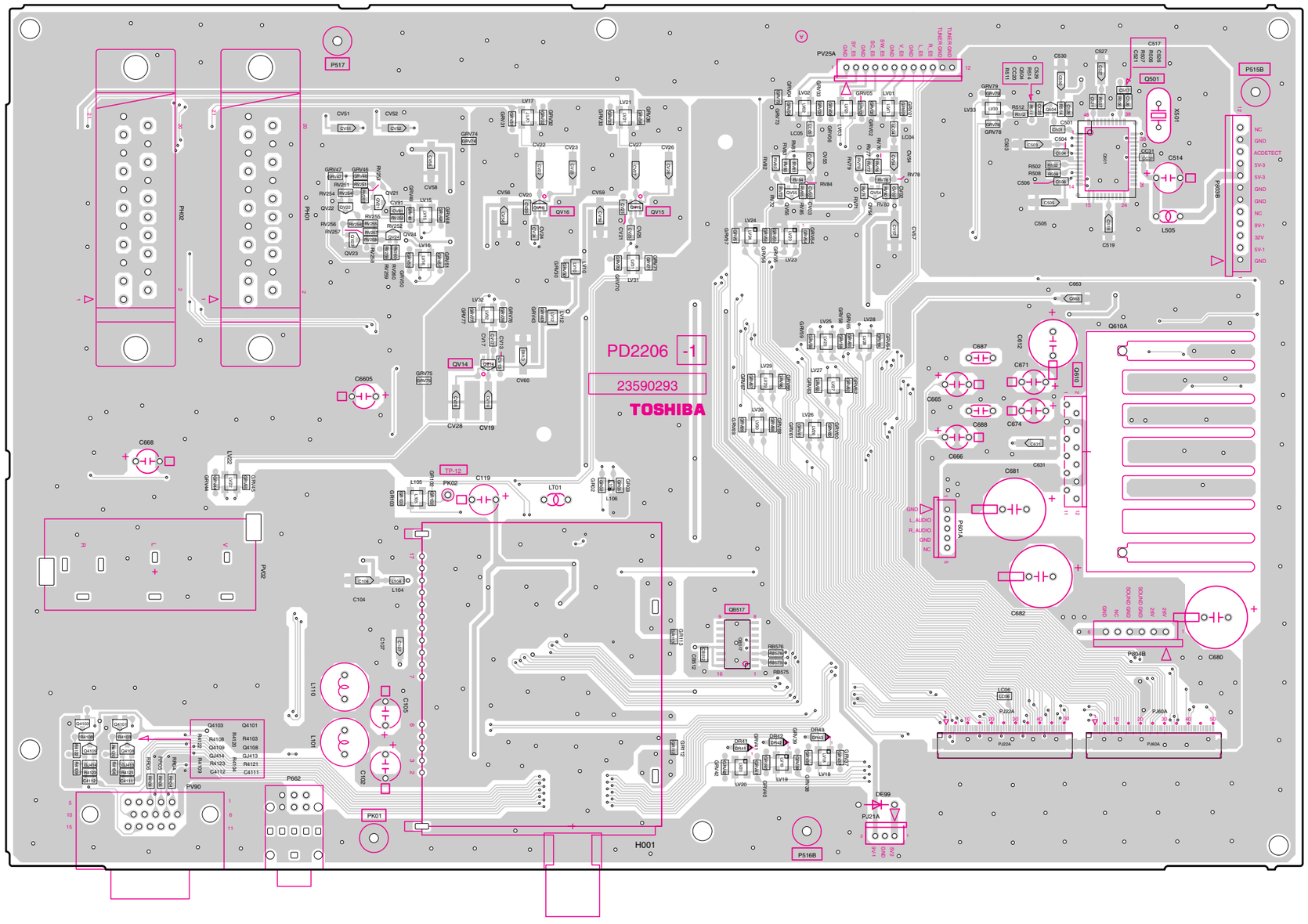

FRONT AV BOARD PD2206A2 (U003B)

BOTTOM (FOIL) SIDE

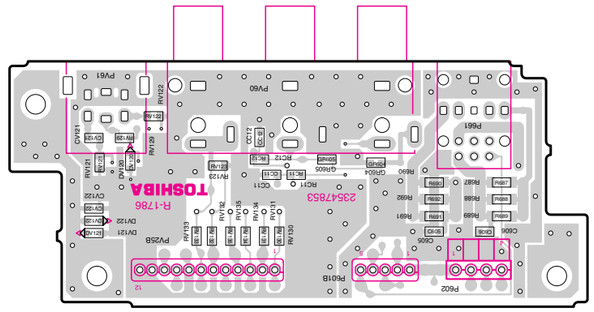

FRONT AV BOARD PD2206A2 (U003B)

TOP (COMPONENT) SIDE

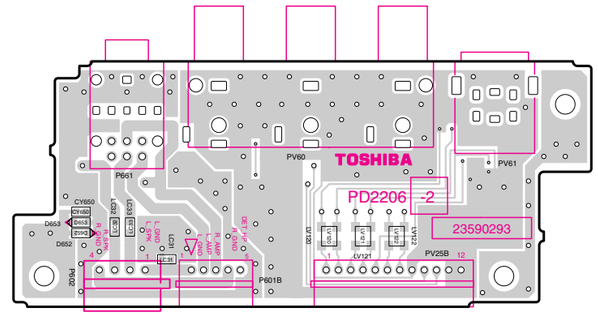

KEY BOARD PD2206A3 (U003C)

BOTTOM (FOIL) SIDE

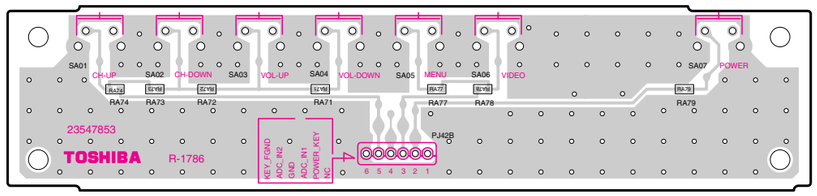

KEY BOARD PD2206A3 (U003C)

TOP (COMPONENT) SIDE

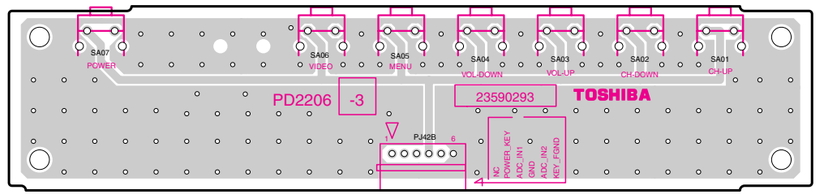

RMT LED BOARD PD2206A4 (U003D)

BOTTOM (FOIL) SIDE

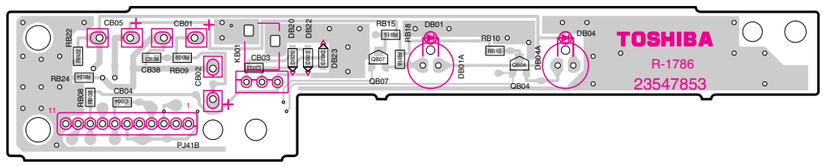

RMT LED BOARD PD2206A4 (U003D)

TOP (COMPONENT) SIDE

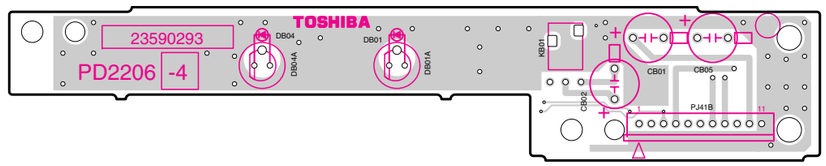

SCHEMATIC DIAGRAM

MODEL : 42WP56P

WARNING : BEFORE SERVICING THIS CHASSIS, READ THE "SERVICE SAFETY PRECAUTIONS" ON PAGE 3 OF THIS MANUAL.

CAUTION : The international hazard symbols "⚠" in the schematic diagram and the parts list designate components which have special characteristics important for safety and should be replaced only with types identical to those in the original circuit or specified in the parts list. The mounting position of replacements is to be identical with originals. Before replacing any of these components, read carefully the SERVICE SAFETY PRECAUTIONS on the MANUAL for this model. Do not degrade the safety of the receiver through improper servicing.

NOTE:

1. RESISTOR Resistance is shown in ohm [K = 1.000, M = 1.000.000]. All resistors are 1/6W and 5% tolerance carbon resistor, unless otherwise noted as the following marks.
   1/2R = Metal or Metal oxide of 1/2 watt 1/2S = Carbon compsistion of 1/2 watt
   1RF = Fuse resistor of 1 watt 10W = Cement of 10 watt
   K = ±10% G = ±2% F = ±1%
2. CAPACITOR Unless otherwise noted in schematic, all capacitor values less than 1 are expressed in μF, and the values more than 1 in pF.
   All capacitors are ceramic 50V, unless otherwise noted as the following marks.
   —|(+)|— Electolytic capacitor —|(M)|— Mylar capacitor
3. The parts indicated with " ⚠ " have special characteristics, and should be replaced with identical parts only.
4. Voltages read with DIGITAL MULTI-METER from point indicated to chassing ground, using a color bar signal with all controls at normal, line voltage 220 volts.
5. Waveforms are taken receiving color bar signal with enough sensitivity.
6. Voltage reading shown are nominal values and may vary ±20% except H.V.

■ **SCHEMATIC DIAGRAM STRUCTURE:**

LOWB 1/52
CONNECTOR 2/52
AV-TERMINAL 3/52
TIF 4/52
A-OUT 5/52
TEXT-SW 6/52
TV-OUT 7/52
VIDEO-CROMA 8/52
EXPANDER FPR PDP 9/52
FRONT-AV 10/52
KEY 11/52
RMT LED 12/52
SIGNAL
- ANALOG IN [SHEET-200] 13/52
- PIP VCD [SHEET-206] 14/52
- REG/RESET [SHEET-207] 15/52
- INPUT LPF [SHEET-208] 16/52
- Functi [SHEET-209] 17/52
- D IN A [SHEET-300] 18/52
- D IN B [SHEET-301] 19/52
- HDMI (Link, I2C) [SHEET-302] 20/52
- HDMI Rx#2 (Video/Audio) [SHEET-303] 21/52
- HDMI Rx#3 (PWR,Audio) [SHEET-304] 22/52
- HDMI AUDIO PLL [SHEET-305] 23/52
- HDMI AUDIO DAC [SHEET-306] 24/52
- HDMI AUDIO OUT [SHEET-307] 25/52
- HDMI CONTROLLER [SHEET-308] 26/52
- EEPROM1 [SHEET-309] 27/52
- EEPROM2 [SHEET-310] 28/52
- MICRO I/O [SHEET-400] 29/52
- OCM MEMORY I/F [SHEET-401] 30/52
- FLASH MEMORY [SHEET-402] 31/52
- SYNC SEPA [SHEET-403] 32/52
- E2P OTHER [SHEET-404] 33/52
- STD-BY MICOR [SHEET-405] 34/52
- CORTEZ REG 1 [SHEET-406] 35/52
- CORTEZ REG 2 [SHEET-407] 36/52
- CORTEZ REG 3 [SHEET-408] 37/52
- BOOT CONFIG [SHEET-409] 38/52
- SERVICE CONNECTOR [SHEET-410] 39/52
- I2C Switch [SHEET-411] 40/52
- AUDIO [SHEET-600] 41/52
- AUDIO MSP [SHEET-601] 42/52
- CORTEZ 1 [SHEET-700] 43/52
- CORTEZ 2 [SHEET-701] 44/52
- DDR I/F [SHEET-702] 45/52
- DDR SDRAM [SHEET-703] 46/52
- DDR TERMINATION [SHEET-704] 47/52
- DCDC CONV. [SHEET-802] 48/52
- LVDS OUT [SHEET-900] 49/52
- LVDS OUT(SHARP LCD) [SHEET-901] 50/52
- Power Connector and Dimming [SHEET-902] 51/52
- LVDS Power and Others [SHEET-903] 52/52

CIRCUIT BLOCK DIAGRAM

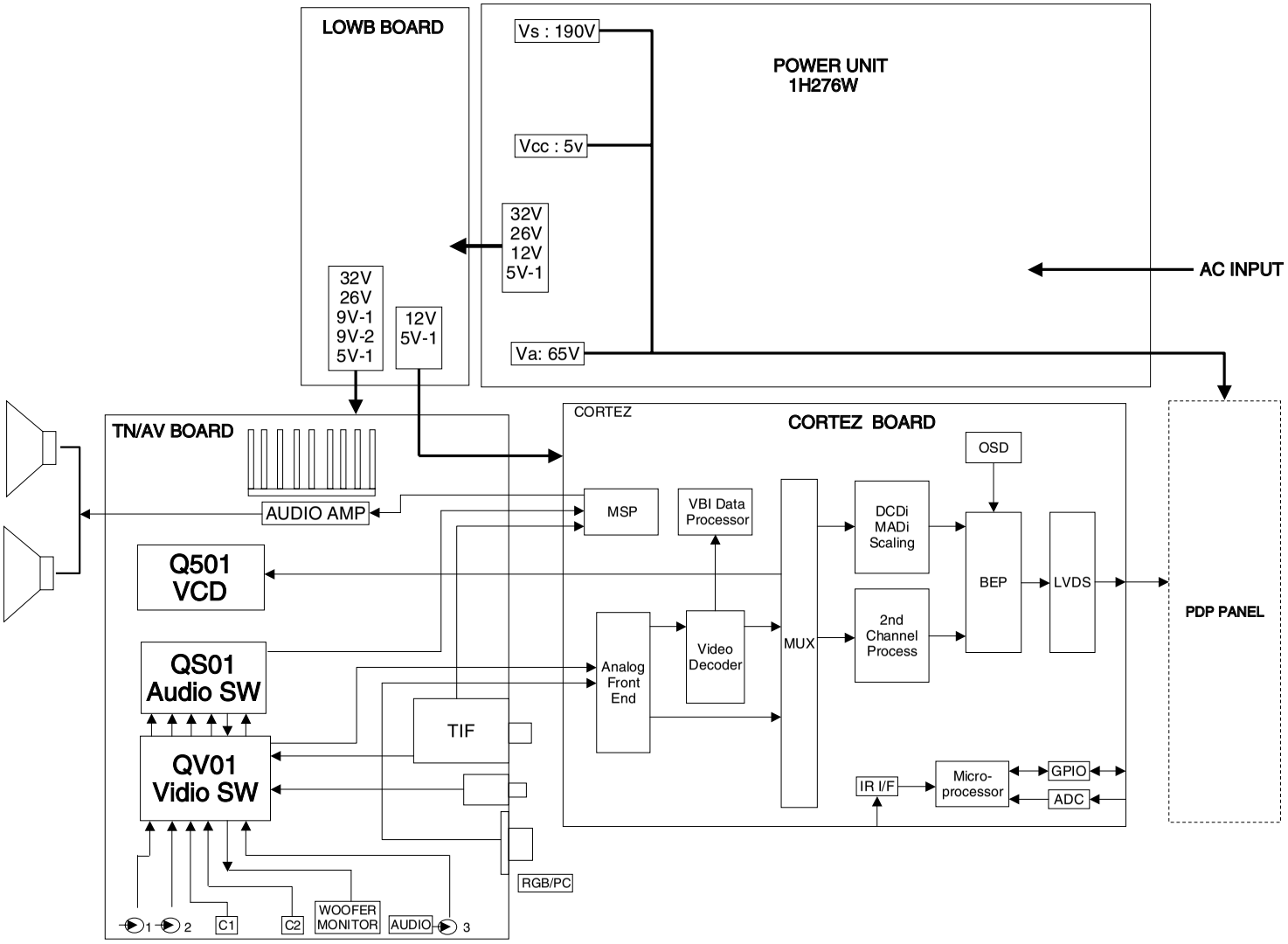

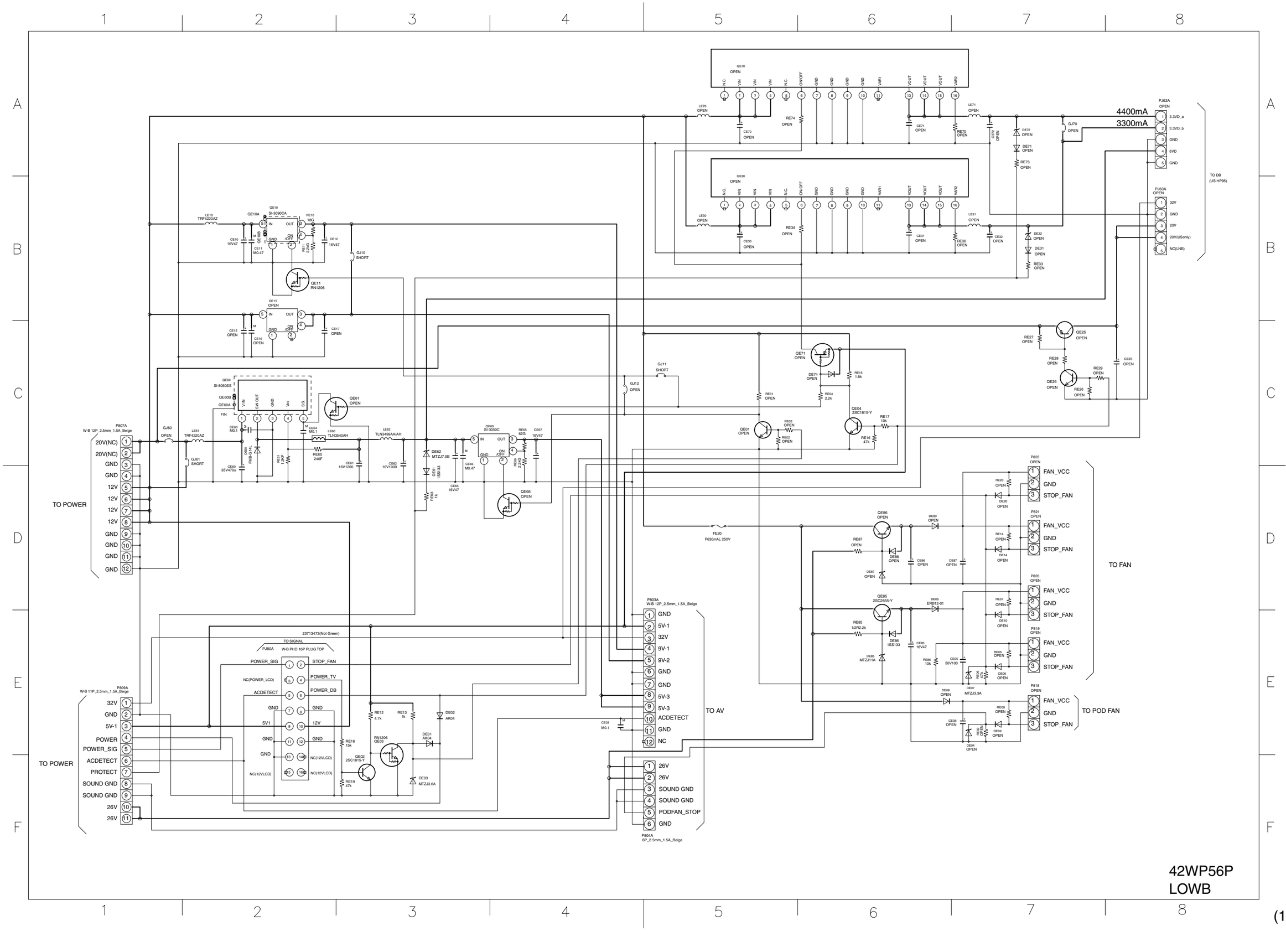
4400mA
3300mA
TO DB
(US HP95)
TO FAN
TO AV
TO POWER
TO POWER
TO FAN
TO POD FAN
TO SIGNAL
23713473(Not Green)
PJ80A W-B PHD 16P PLUG TOP
P807A W-B 12P_2.5mm_1.5A_Beige
P809A W-B 11P_2.5mm_1.5A_Beige
P803A W-B 12P_2.5mm_1.5A_Beige
P804A 6P_2.5mm_1.5A_Beige
PJ62A OPEN
PJ63A OPEN
P822 OPEN
P821 OPEN
P820 OPEN
P819 OPEN
P818 OPEN
3.3VD_a
3.3VD_b
GND
6VD
32V
20V
20V(USonly)
NC(LNB)
FAN_VCC
STOP_FAN
20V(NC)
12V
26V
SOUND GND
PODFAN_STOP
5V-1
9V-1
9V-2
5V-3
ACDETECT
PROTECT
POWER
POWER_SIG
POWER_TV
POWER_DB
5V1
NC(12VLCD)
NC(POWER_LCD)
SI-8050SS
SI-3090CA
SI-3050C
TRF4220AZ
TLN3540AH
TLN3498AA/AH
FE20
F630mAL 250V
42WP56P
LOWB
(1/52)

TO SIGNAL BOARD

3P

PJ21A

PLUG_2mm_3P.B3B-PH-K-S

50P-FFC

PJ22A

9637S-50ATL FFC/FPC SOCKET

50P-FFC

PJ60A

9637S-50ATL FFC/FPC SOCKET

5P
FRONT-AV BOARD

P601A
B5B-PH-K-S

12P
FRONT-AV(E3)

PV25A
B12B-PH-K-S

12P

P803R
W-B 12P_2.5mm_1.5A_Beige

1 GND
2 5V-1
3 32V
4 9V-1
5 NC(9V-2)
6 GND
7 GND
8 5V-3
9 5V-3
10 ACDETECT
11 GND
12 NC

TO LOWB BOARD

P804B
6P_2.5mm_1.5A_Beige

1 26V
2 26V
3 SOUND GND
4 SOUND GND
5 NC(PODFAN_STOP)
6 GND

6P

42WP56P
CONNECTOR

PC-AUDIO

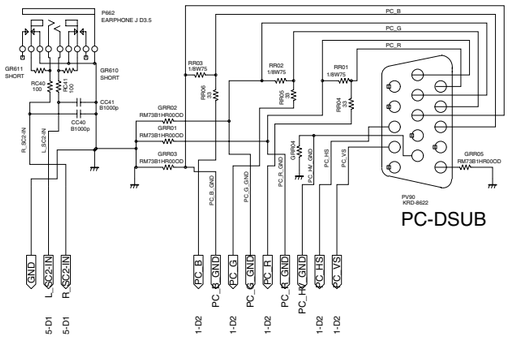

EXT-1

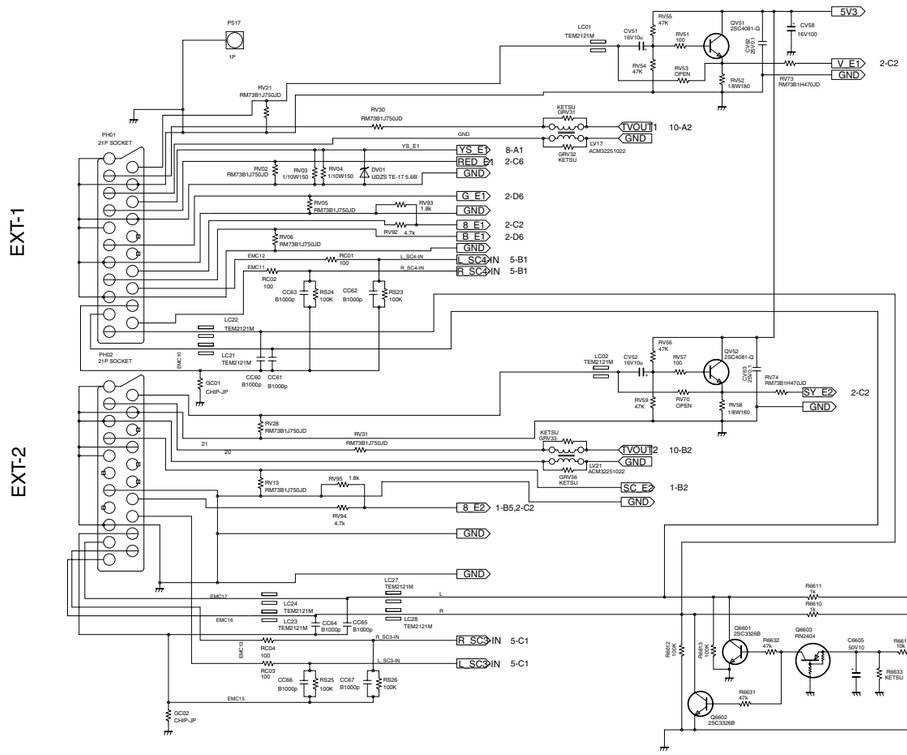

EXT-2

MON-OUT

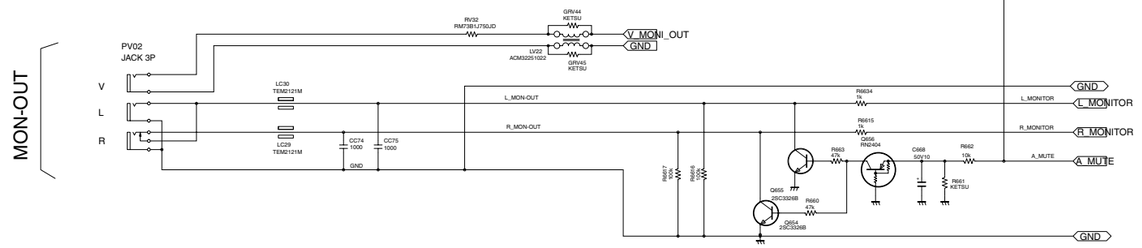

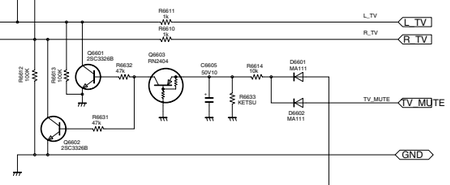

42WP56P
AV-TERMINAL

NEW

H001
ENG37A13GF

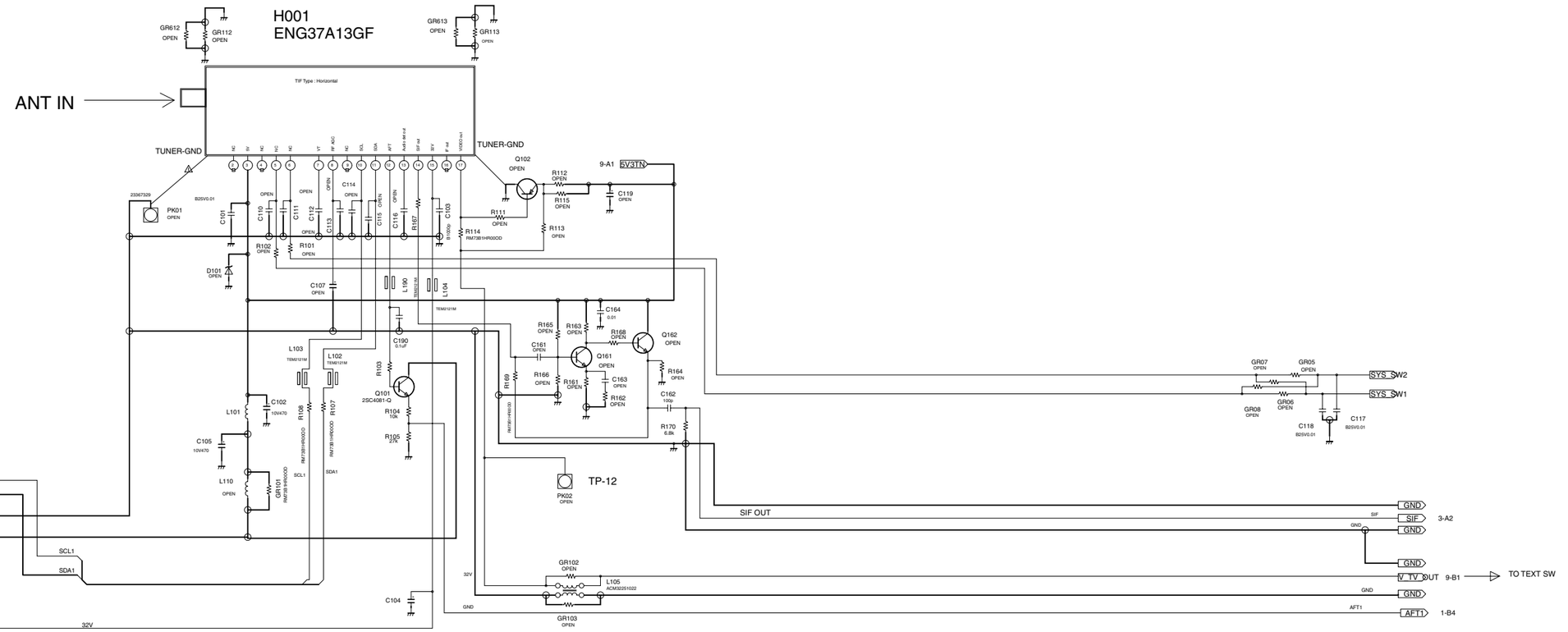

42WP56P
TIF

Q610
TA8246AHQ
Q610A
HEAT SINK
Q601B
BITTB3X10

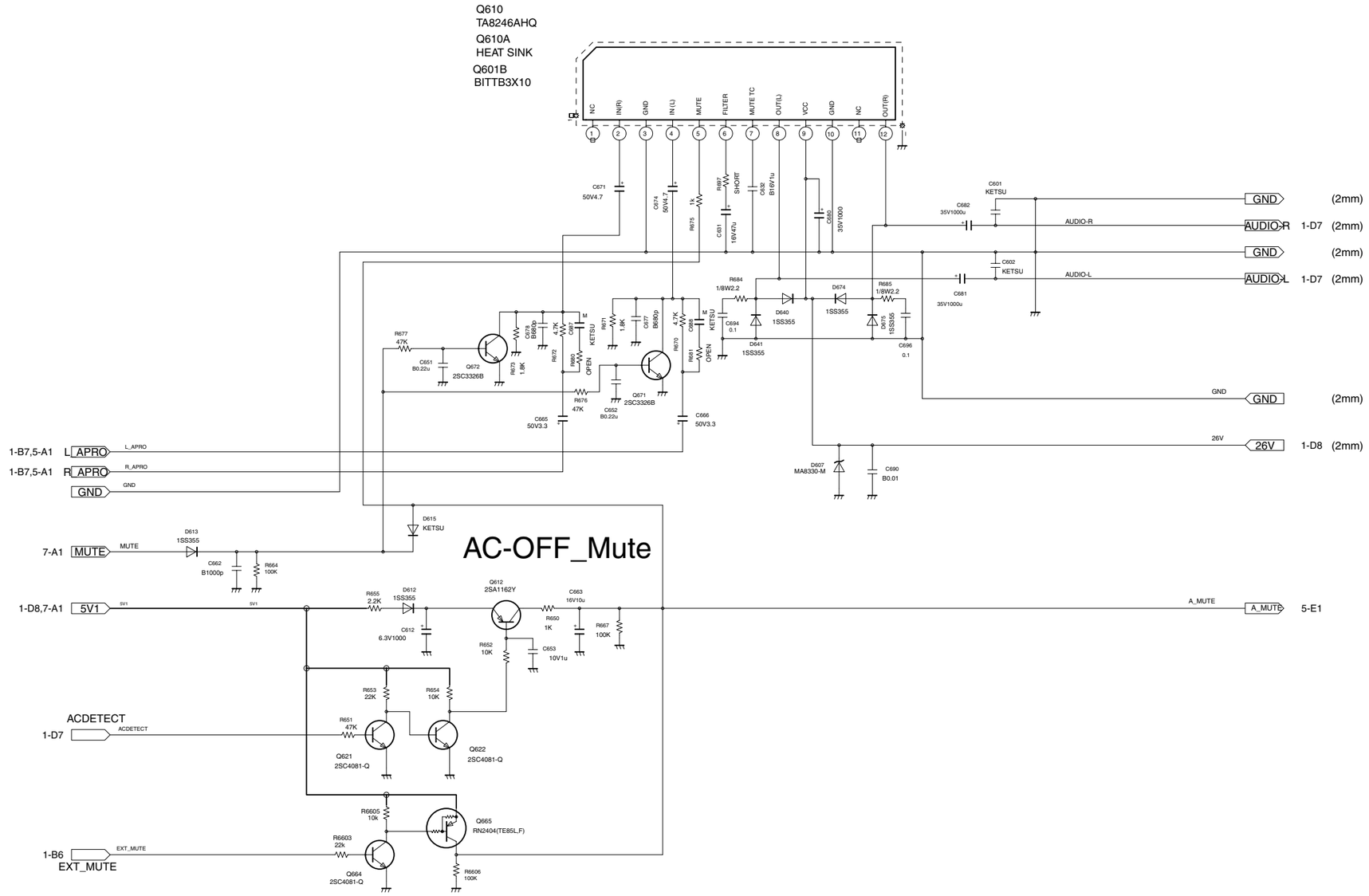

42WP56P
A-OUT

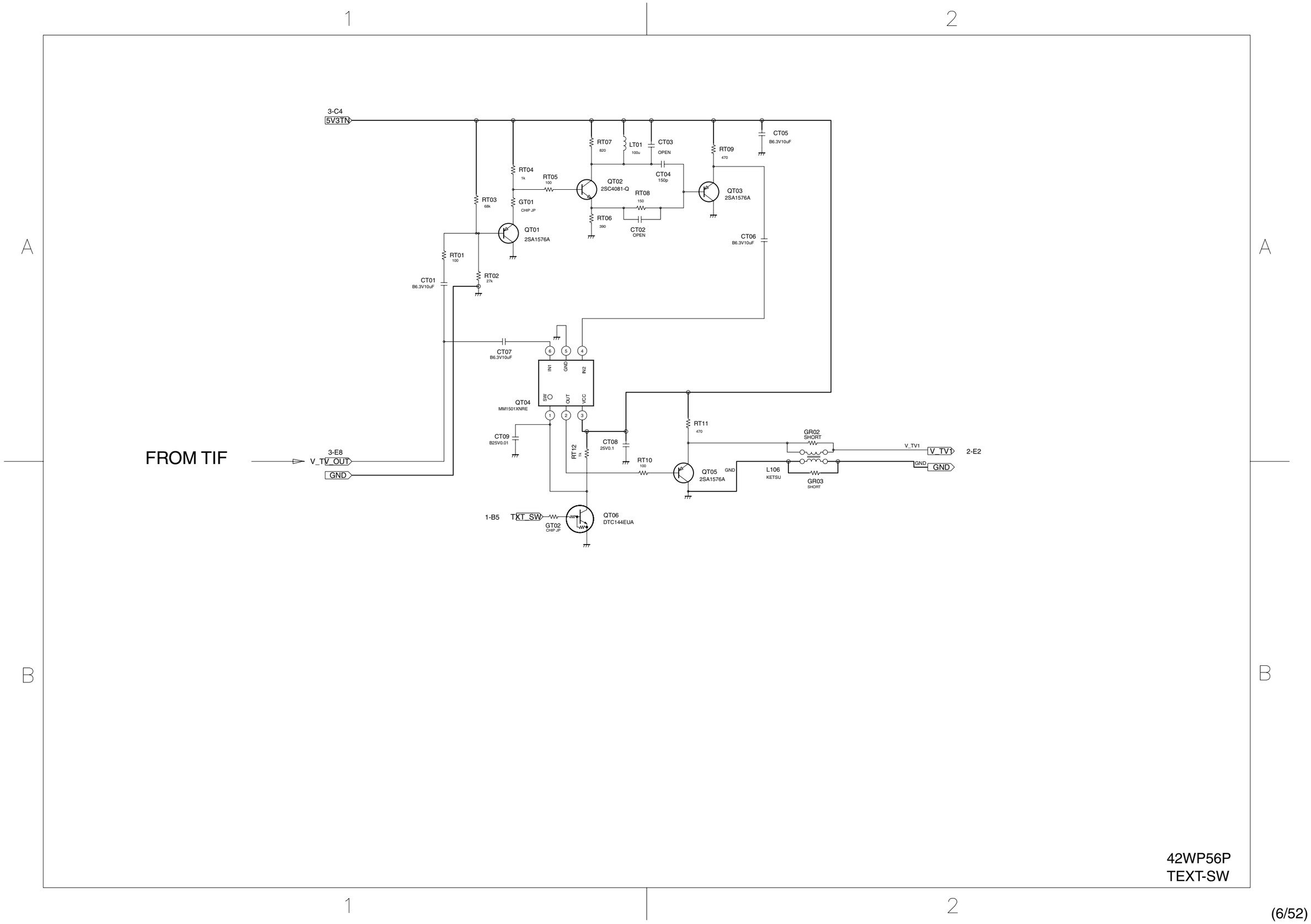

3-C4
5V3TN
RT07
820
LT01
100u
CT03
OPEN
CT05
B6.3V10uF
RT09
470
RT04
1k
RT05
100
QT02
2SC4081-Q
CT04
150p
RT08
150
QT03
2SA1576A
RT03
68k
GT01
CHIP JP
RT06
390
CT02
OPEN
QT01
2SA1576A
CT06
B6.3V10uF
RT01
100
CT01
B6.3V10uF
RT02
27k
CT07
B6.3V10uF
IN1
GND
IN2
SW
OUT
VCC
QT04
MM1501XNRE
RT11
470
GR02
SHORT
CT09
B25V0.01
CT08
25V0.1
RT12
1k
RT10
100
QT05
2SA1576A
GND
L106
KETSU
GR03
SHORT
V_TV1
V_TV1
2-E2
GND
GND
FROM TIF
3-E8
V_TV_OUT
GND
1-B5
TXT_SW
GT02
CHIP JP
QT06
DTC144EUA
42WP56P
TEXT-SW

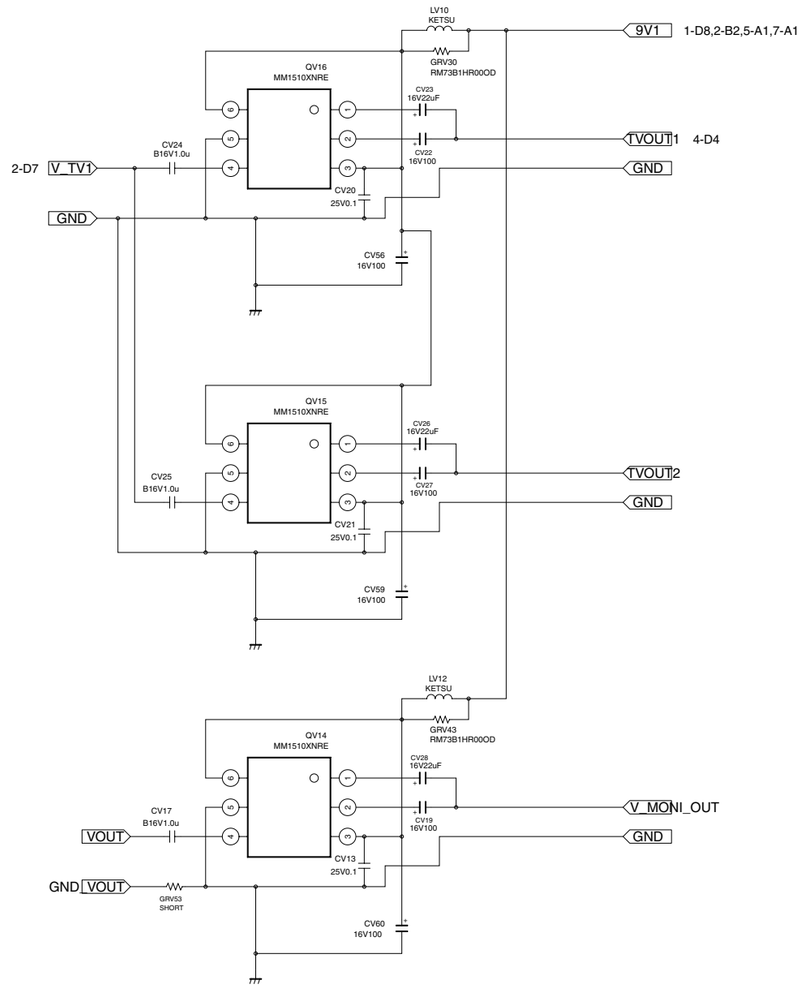

42WP56P
TV-OUT

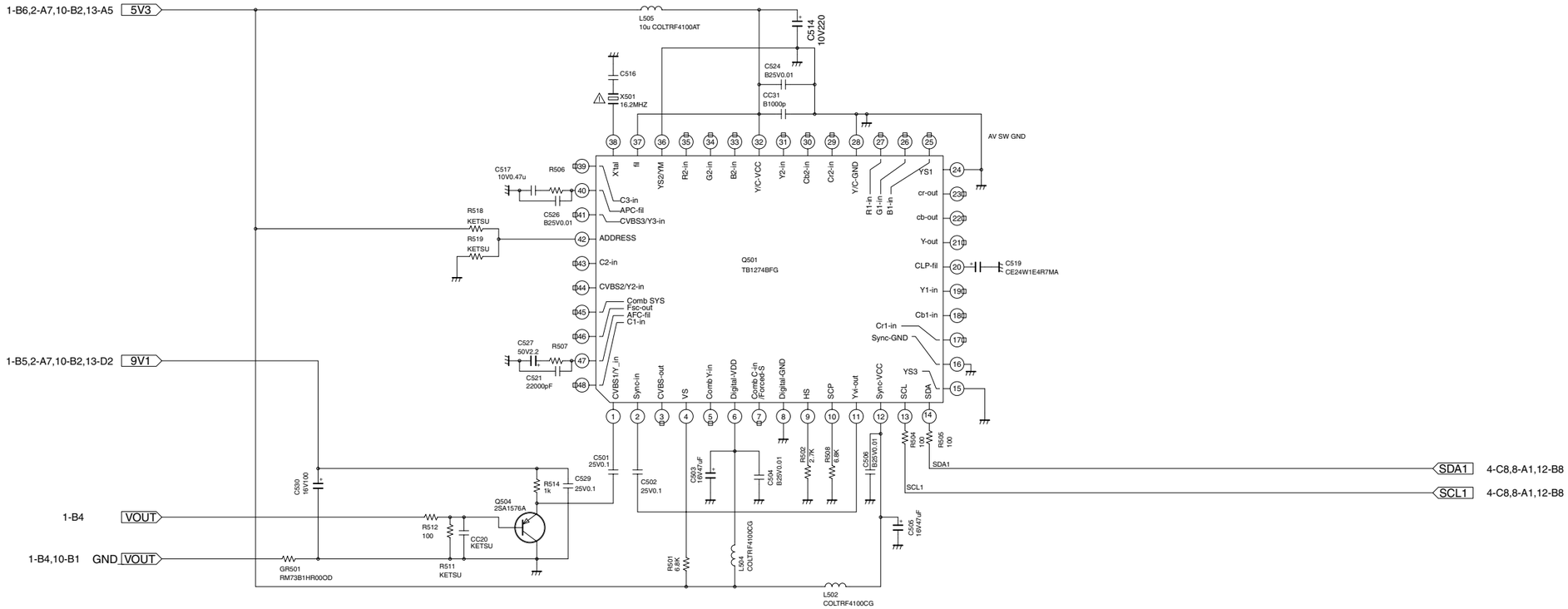

42WP56P
VIDEO-CROMA

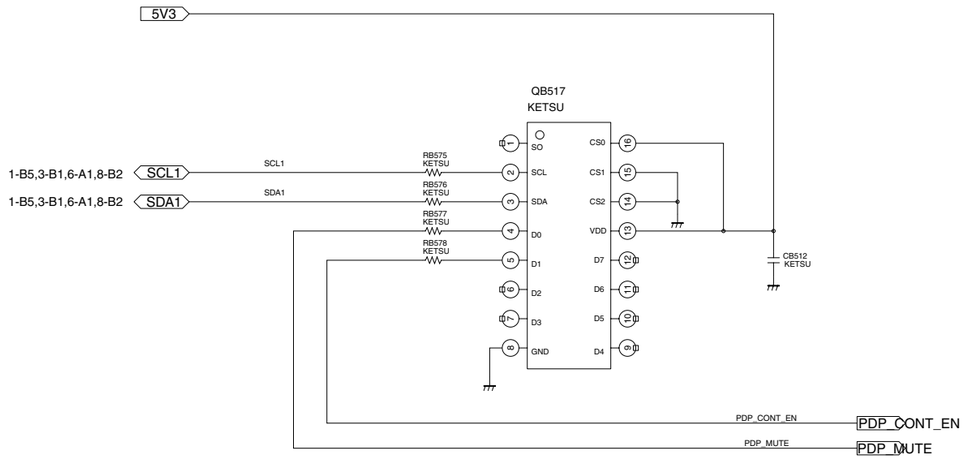

42WP56P
EXPANDER FPR PDP

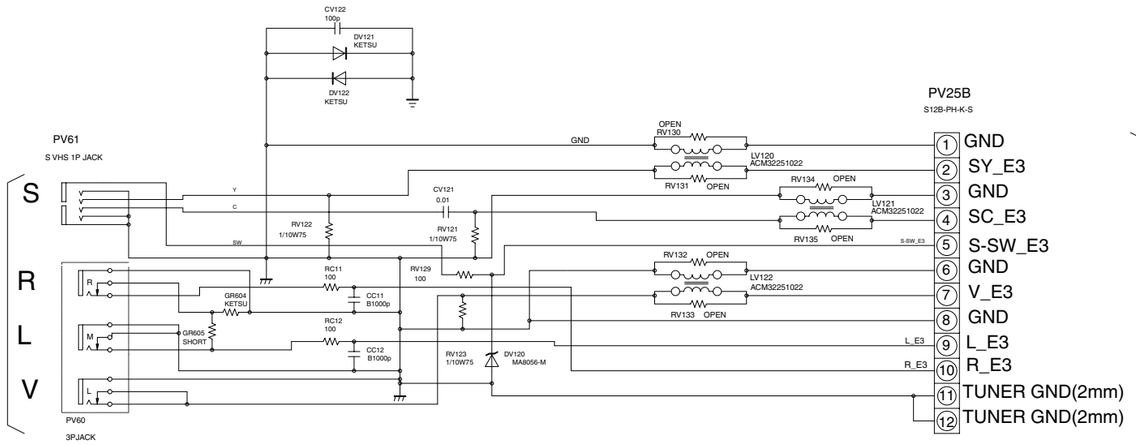

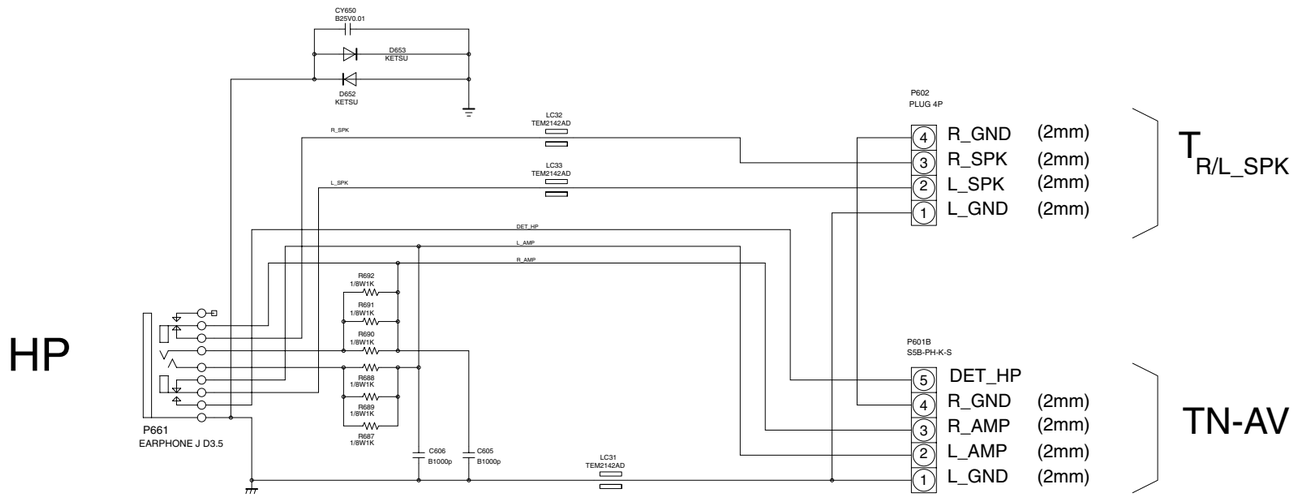

42WP56P
FRONT-AV

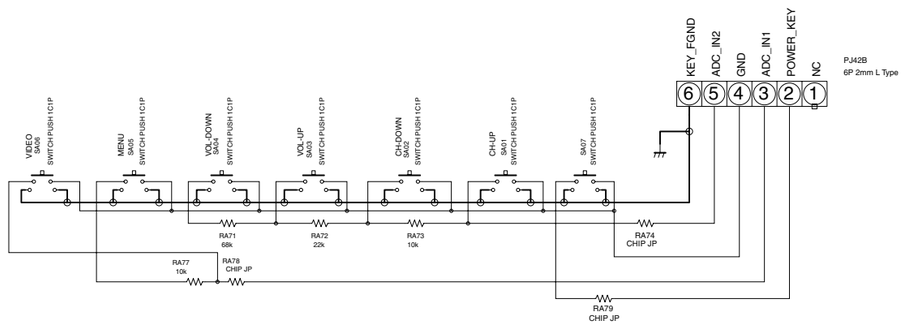
KEY_FGND
ADC_IN2
GND
ADC_IN1
POWER_KEY
NC
6
5
4
3
2
1
PJ42B
6P 2mm L Type
VIDEO
SA06
MENU
SA05
VOL_DOWN
SA04
VOL_UP
SA03
CH-DOWN
SA02
CH-UP
SA01
SA07
SWITCH PUSH 1C1P
RA71
68k
RA72
22k
RA73
10k
RA74
CHIP JP
RA77
10k
RA78
CHIP JP
RA79
CHIP JP

42WP56P
KEY

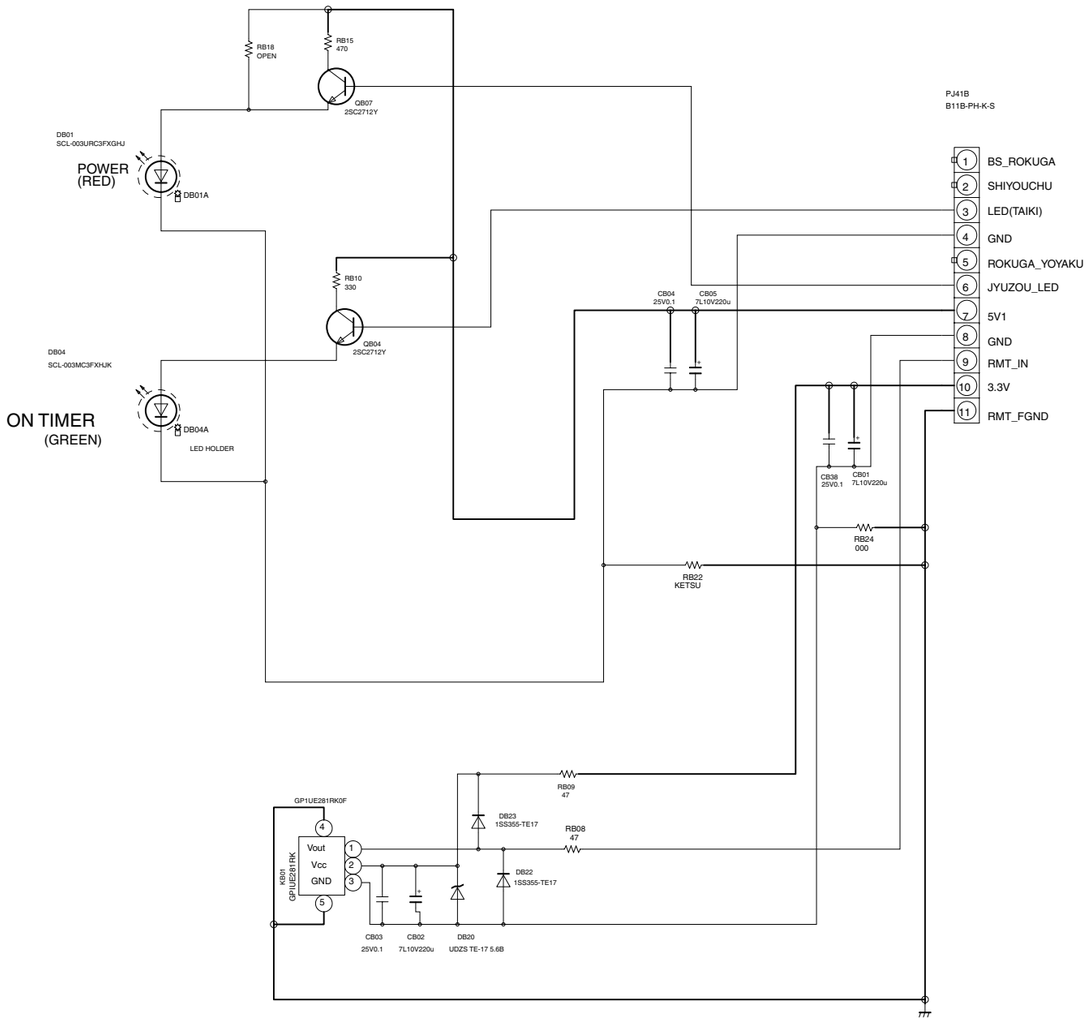

42WP56P
RMT LED

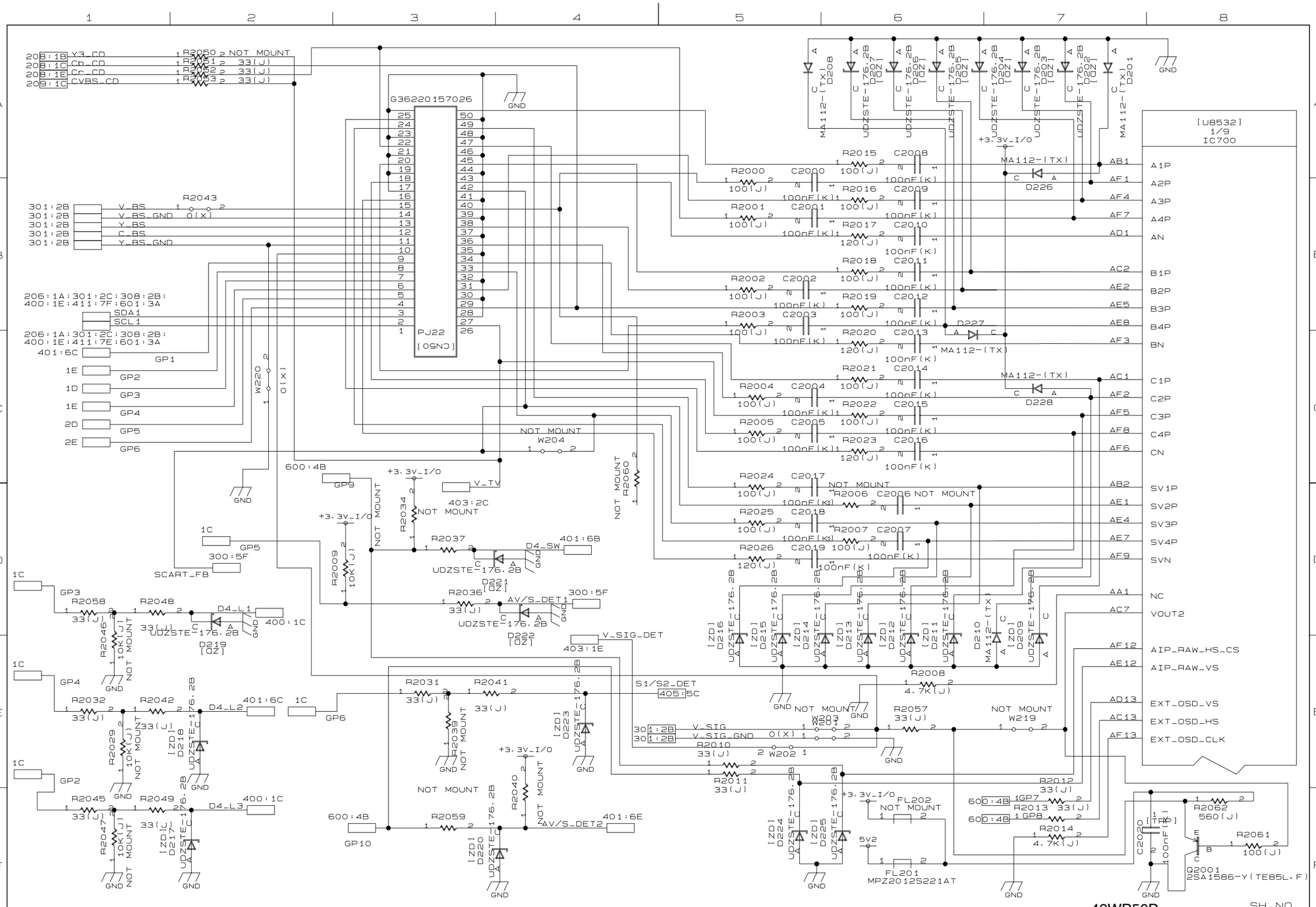
[U8532]
1/9
IC700
PJ22
[CN50]
G36220157026
GND
+3.3V_I/O
Y3_CD
Cb_CD
Cr_CD
CVBS_CD
R2050 NOT MOUNT
R2051 33(J)
R2052 33(J)
R2053 33(J)
R2043
V_BS
V_BS_GND
Y_BS
C_BS
Y_BS_GND
SDA1
SCL1
GP1
GP2
GP3
GP4
GP5
GP6
W220
NOT MOUNT
W204
GP9
V_TV
403:2C
R2034
R2009 10K(J)
R2037
D4_SW
401:6B
D221 [0Z]
SCART_FB
300:5F
R2036 33(J)
AV/S_DET1
D222 [0Z]
R2058 33(J)
R2048 33(J)
D4_L1
400:1C
D219 [0Z]
R2046 10K(J)
R2032 33(J)
R2042 33(J)
D4_L2
401:6C
D218 [0Z]
R2029 10K(J)
R2045 33(J)
R2049 33(J)
D4_L3
D217 [0Z]
R2047 10K(J)
R2031 33(J)
R2041 33(J)
R2030
D223 [0Z]
S1/S2_DET
405:5C
V_SIG_DET
403:1E
R2040
R2059
D220 [0Z]
AV/S_DET2
401:6E
GP10
R2000 100(J)
C2000 100nF(K)
R2001 100(J)
C2001 100nF(K)
R2002 100(J)
C2002 100nF(K)
R2003 100(J)
C2003 100nF(K)
R2004 100(J)
C2004 100nF(K)
R2005 100(J)
C2005 100nF(K)
R2015 100(J)
C2008 100nF(K)
R2016 100(J)
C2009 100nF(K)
R2017 120(J)
C2010 100nF(K)
R2018 100(J)
C2011 100nF(K)
R2019
C2012 100nF(K)
R2020 120(J)
C2013 100nF(K)
R2021 100(J)
C2014 100nF(K)
R2022
C2015 100nF(K)
R2023 120(J)
C2016 100nF(K)
R2024 100(J)
C2017 100nF(K)
R2025 100(J)
C2018 100nF(K)
R2026 120(J)
C2019 100nF(K)
R2006 C2006 NOT MOUNT
R2007 C2007
100(J) 100nF(K)
MA112-(TX) D208
UDZSTE-176.2B D207 [0Z]
UDZSTE-176.2B D206 [0Z]
UDZSTE-176.2B D205 [0Z]
UDZSTE-176.2B D204 [0Z]
UDZSTE-176.2B D203 [0Z]
UDZSTE-176.2B D202 [0Z]
MA112-(TX) D201
D226
D227
D228
D216 [ZD]
D215 [ZD]
D214 [ZD]
D213 [ZD]
D212 [ZD]
D211 [ZD]
D210 MA112-(TX)
D209 [ZD]
R2008 4.7K(J)
NOT MOUNT
W203
W201
W202
V_SIG
V_SIG_GND
R2010 33(J)
R2011 33(J)
R2057 33(J)
W219
D224 [ZD]
D225 [ZD]
FL202
FL201
MPZ2012S221AT
5V2
R2012 33(J)
R2013 33(J)
R2014 4.7K(J)
R2062 560(J)
R2061 100(J)
C2020 100nF(K)
Q2001
2SA1586-Y(TE85L,F)
AB1
AF1
AF4
AF7
AD1
AC2
AE2
AE5
AE8
AF3
BN
AC1
AF2
AF5
AF8
AF6
CN
AB2
AE1
AE4
AE7
AF9
SVN
AA1
AC7
AF12
AE12
AD13
AC13
AF13
A1P
A2P
A3P
A4P
AN
B1P
B2P
B3P
B4P
C1P
C2P
C3P
C4P
SV1P
SV2P
SV3P
SV4P
NC
VOUT2
AIP_RAW_HS_CS
AIP_RAW_VS
EXT_OSD_VS
EXT_OSD_HS
EXT_OSD_CLK
42WP56P
SIGNAL ANALOG IN
SH. NO.
200

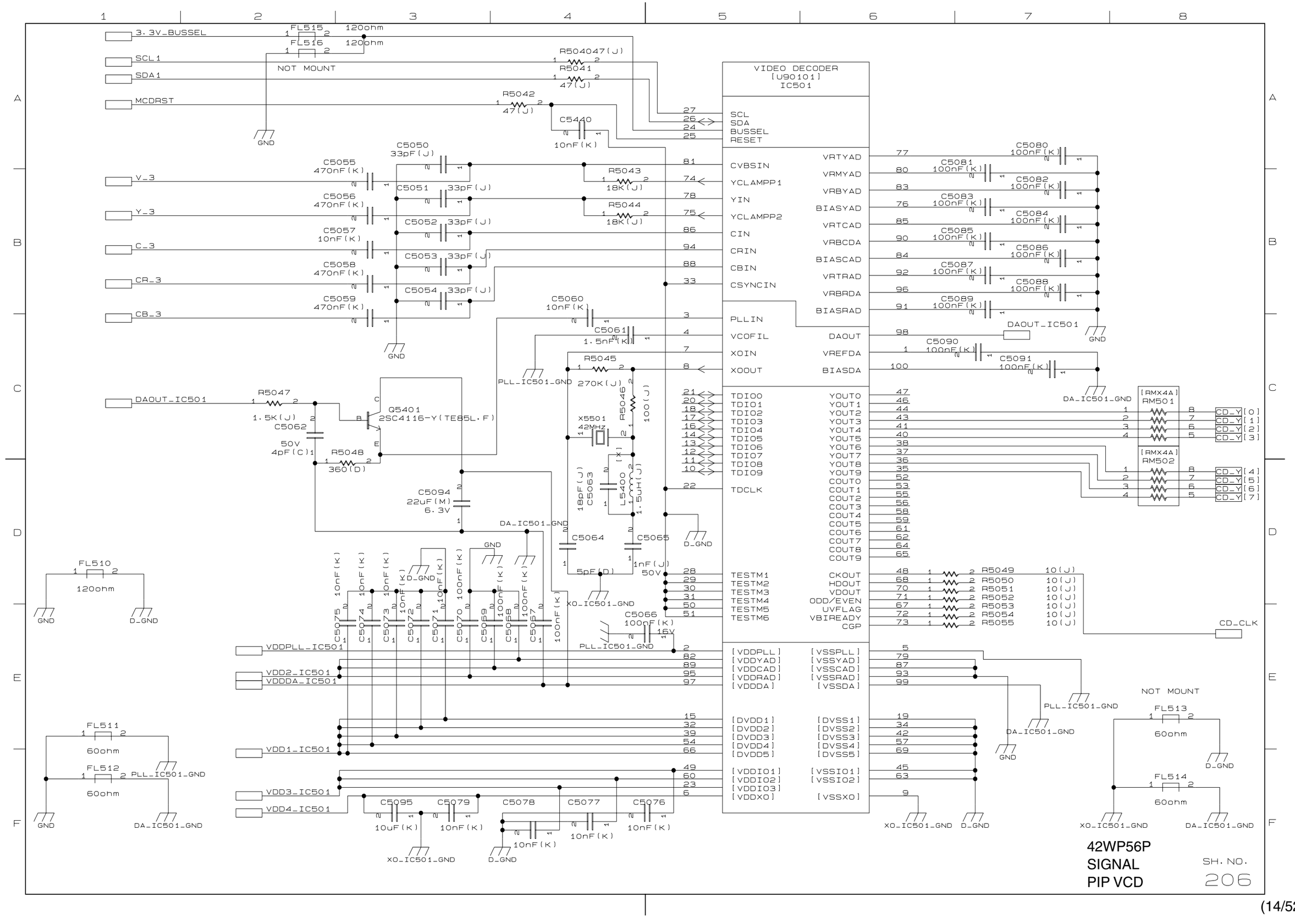
3.3V_BUSSEL
SCL1
SDA1
MCDRST
FL515 120ohm
FL516 120ohm
NOT MOUNT
R504047(J)
R5041 47(J)
R5042 47(J)
C5440 10nF(K)
GND
VIDEO DECODER [U90101] IC501
SCL
SDA
BUSSEL
RESET
CVBSIN
YCLAMPP1
YIN
YCLAMPP2
CIN
CRIN
CBIN
CSYNCIN
PLLIN
VCOFIL
XOIN
XOOUT
V_3
Y_3
C_3
CR_3
CB_3
C5050 33pF(J)
C5055 470nF(K)
C5051 33pF(J)
C5056 470nF(K)
C5052 33pF(J)
C5057 10nF(K)
C5053 33pF(J)
C5058 470nF(K)
C5054 33pF(J)
C5059 470nF(K)
R5043 18K(J)
R5044 18K(J)
C5060 10nF(K)
C5061 1.5nF(K)
R5045 270K(J)
PLL_IC501-GND
DAOUT_IC501
R5047 1.5K(J)
C5062 50V 4pF(C)
Q5401 2SC4116-Y(TE85L,F)
R5048 360(D)
X5501 42MHz
R5046 100(J)
C5063 18pF(J)
L5400 [X] 1.5uH(J)
C5094 22uF(M) 6.3V
DA_IC501_GND
C5064 5pF(D)
C5065 1nF(J) 50V
D_GND
XO_IC501_GND
C5066 100nF(K) 16V
TDI00
TDI01
TDI02
TDI03
TDI04
TDI05
TDI06
TDI07
TDI08
TDI09
TDCLK
TESTM1
TESTM2
TESTM3
TESTM4
TESTM5
TESTM6
VRTYAD
VRMYAD
VRBYAD
BIASYAD
VRTCAD
VRBCDA
BIASCAD
VRTRAD
VRBRDA
BIASRAD
DAOUT
VREFDA
BIASDA
YOUT0
YOUT1
YOUT2
YOUT3
YOUT4
YOUT5
YOUT6
YOUT7
YOUT8
YOUT9
COUT0
COUT1
COUT2
COUT3
COUT4
COUT5
COUT6
COUT7
COUT8
COUT9
CKOUT
HDOUT
VDOUT
ODD/EVEN
UVFLAG
VBIREADY
CGP
C5080 100nF(K)
C5081 100nF(K)
C5082 100nF(K)
C5083 100nF(K)
C5084 100nF(K)
C5085 100nF(K)
C5086 100nF(K)
C5087 100nF(K)
C5088 100nF(K)
C5089 100nF(K)
DAOUT_IC501
C5090 100nF(K)
C5091 100nF(K)
DA_IC501_GND
[RMX4A] RM501
[RMX4A] RM502
CD_Y[0]
CD_Y[1]
CD_Y[2]
CD_Y[3]
CD_Y[4]
CD_Y[5]
CD_Y[6]
CD_Y[7]
R5049 10(J)
R5050 10(J)
R5051 10(J)
R5052 10(J)
R5053 10(J)
R5054 10(J)
R5055 10(J)
CD_CLK
FL510 120ohm
FL511 60ohm
FL512 60ohm
PLL_IC501_GND
C5075 10nF(K)
C5074 10nF(K)
C5073 10nF(K)
C5072 10nF(K)
C5071 10nF(K)
C5070 100nF(K)
C5069 100nF(K)
C5068 100nF(K)
C5067 100nF(K)
VDDPLL_IC501
VDD2_IC501
VDDDA_IC501
VDD1_IC501
VDD3_IC501
VDD4_IC501
[VDDPLL] [VDDYAD] [VDDCAD] [VDDRAD] [VDDDA]
[VSSPLL] [VSSYAD] [VSSCAD] [VSSRAD] [VSSDA]
[DVDD1] [DVDD2] [DVDD3] [DVDD4] [DVDD5]
[DVSS1] [DVSS2] [DVSS3] [DVSS4] [DVSS5]
[VDDIO1] [VDDIO2] [VDDIO3] [VDDXO]
[VSSIO1] [VSSIO2] [VSSXO]
C5095 10uF(K)
C5079 10nF(K)
C5078 10nF(K)
C5077 10nF(K)
C5076 10nF(K)
NOT MOUNT
FL513 60ohm
FL514 60ohm
42WP56P
SIGNAL
PIP VCD
SH. NO.
206

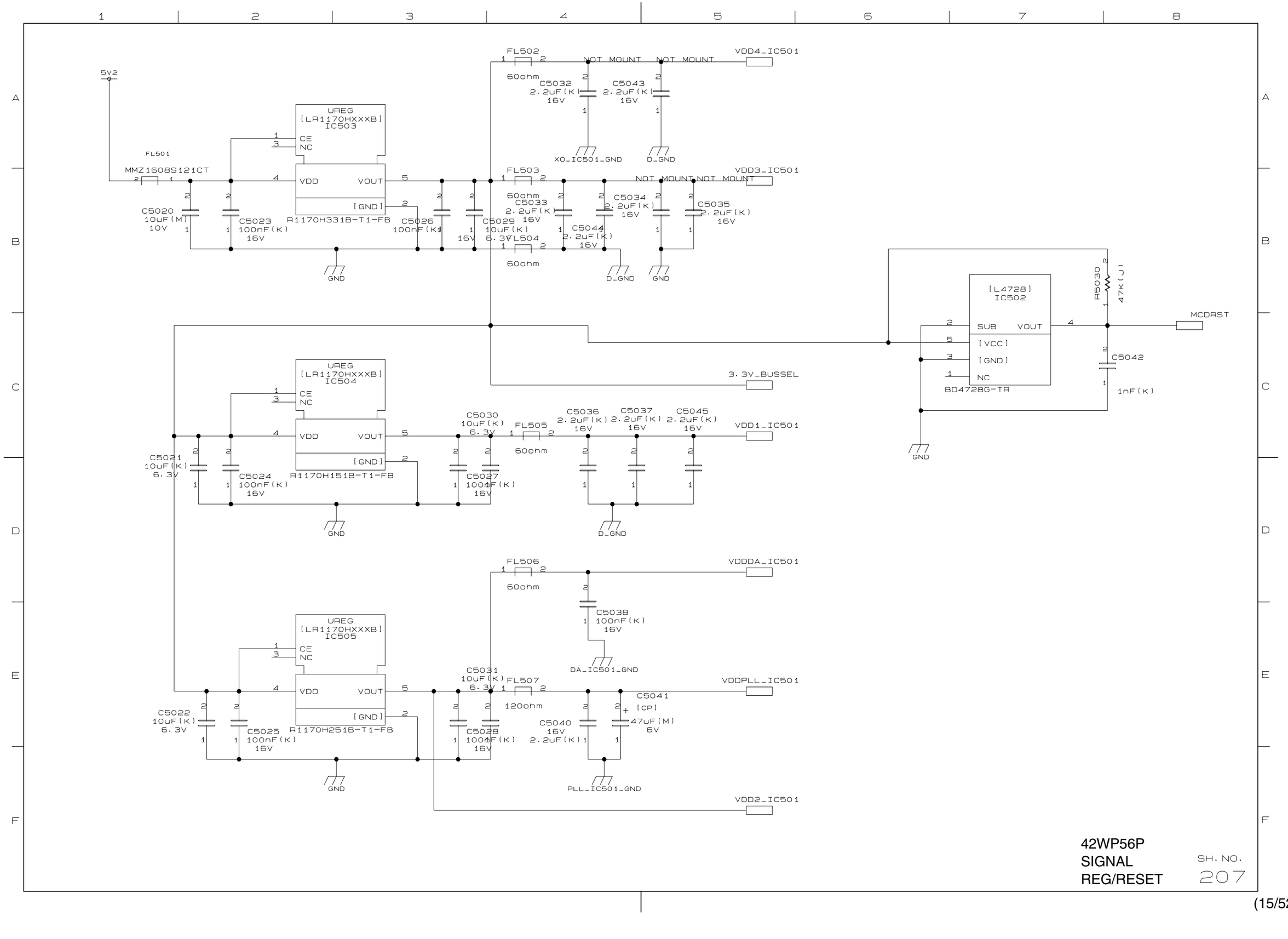

42WP56P
SIGNAL
REG/RESET

SH. NO.
207

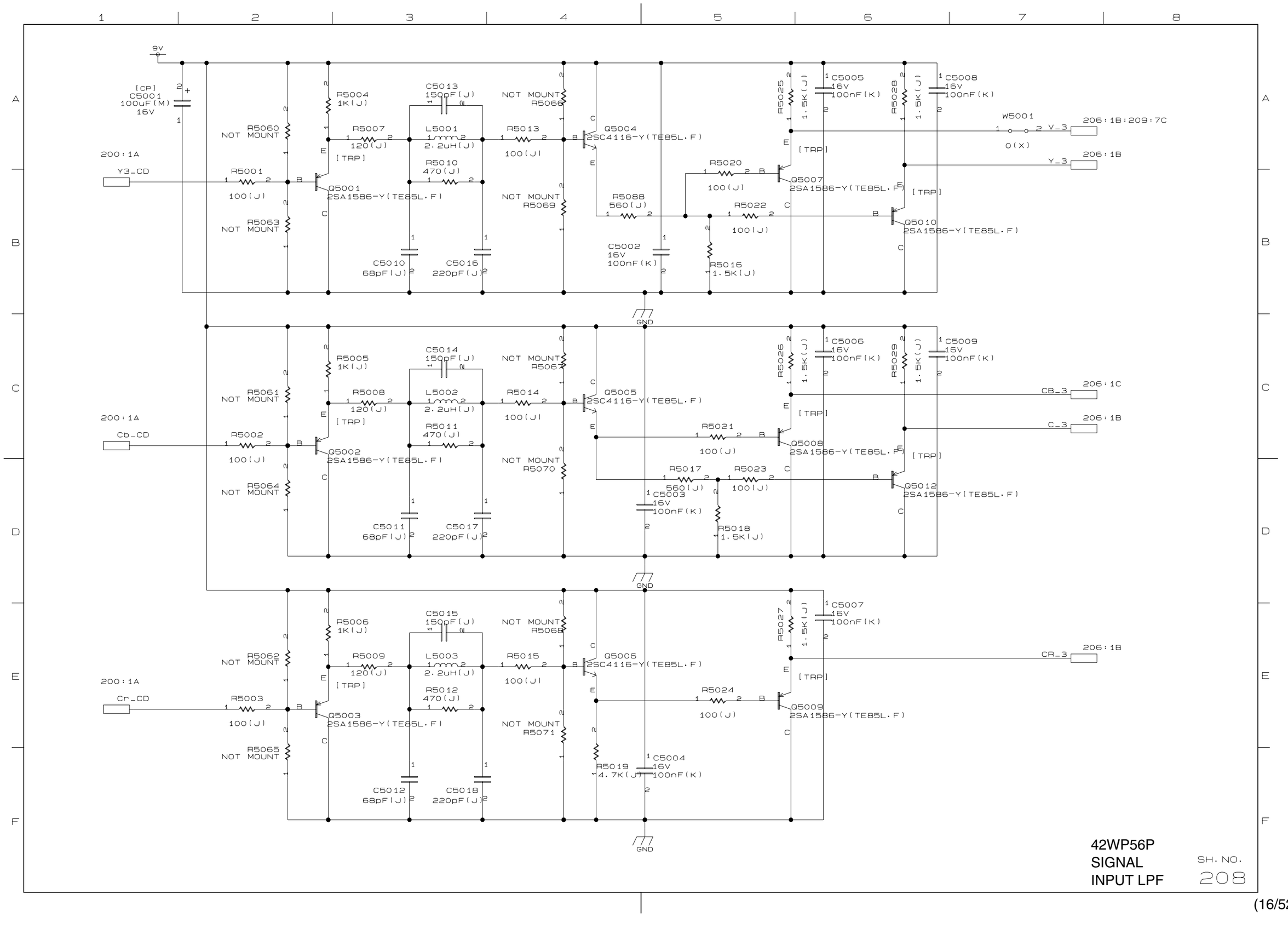

42WP56P
SIGNAL
INPUT LPF

SH. NO.
208

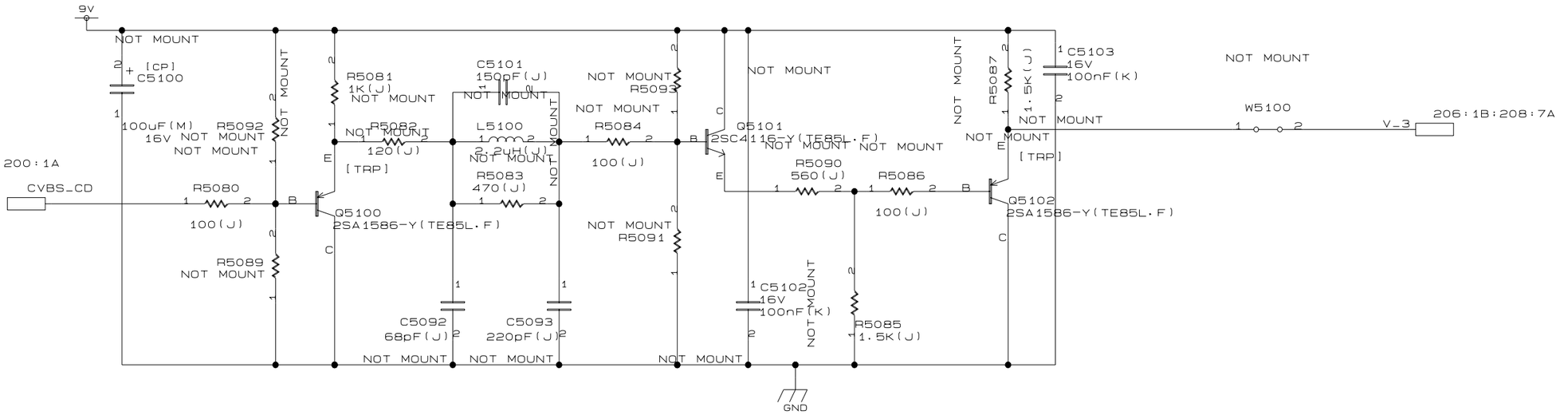

42WP56P
SIGNAL
Functi

SH. NO.
209

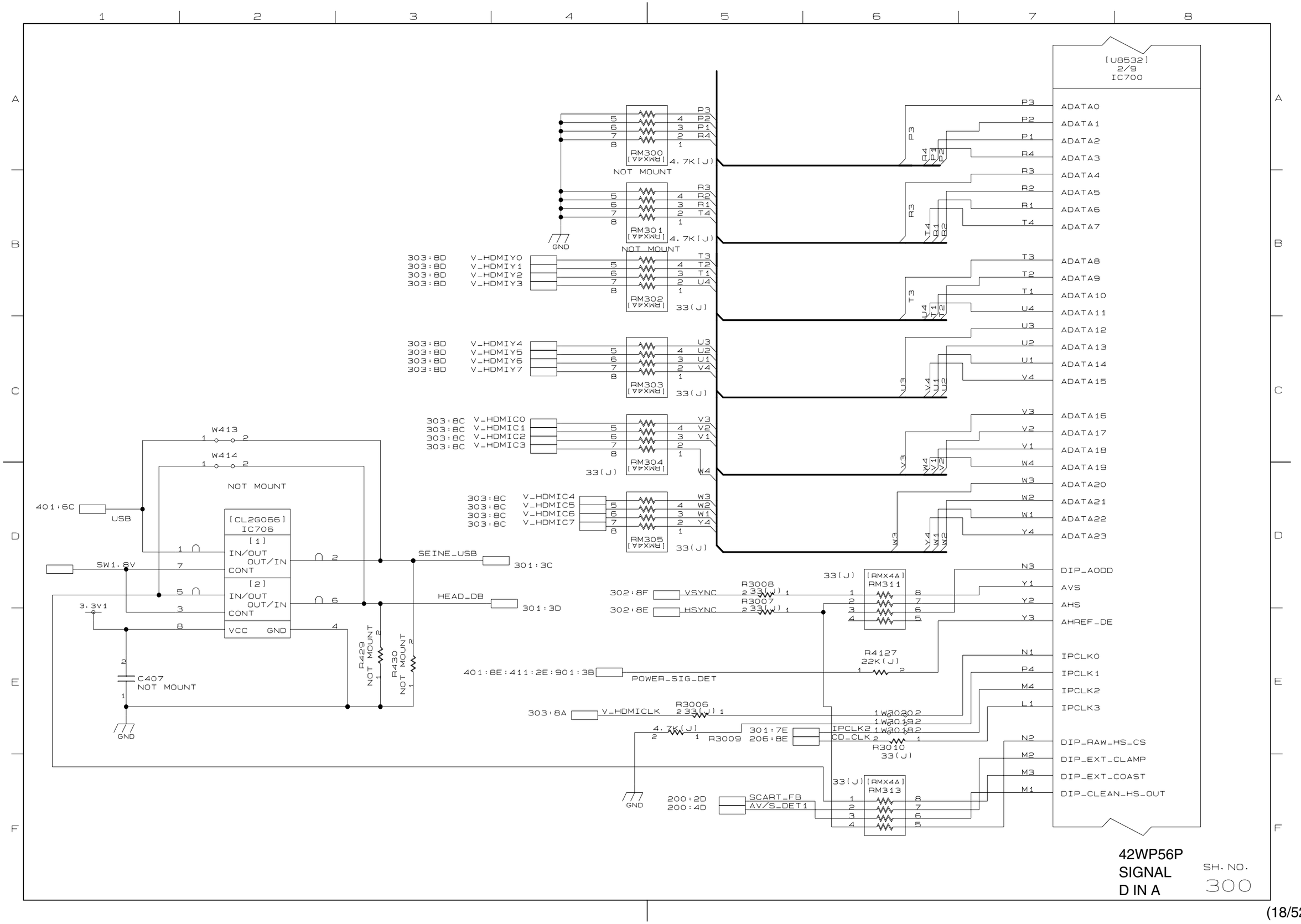

42WP56P
SIGNAL
D IN A

SH. NO.
300

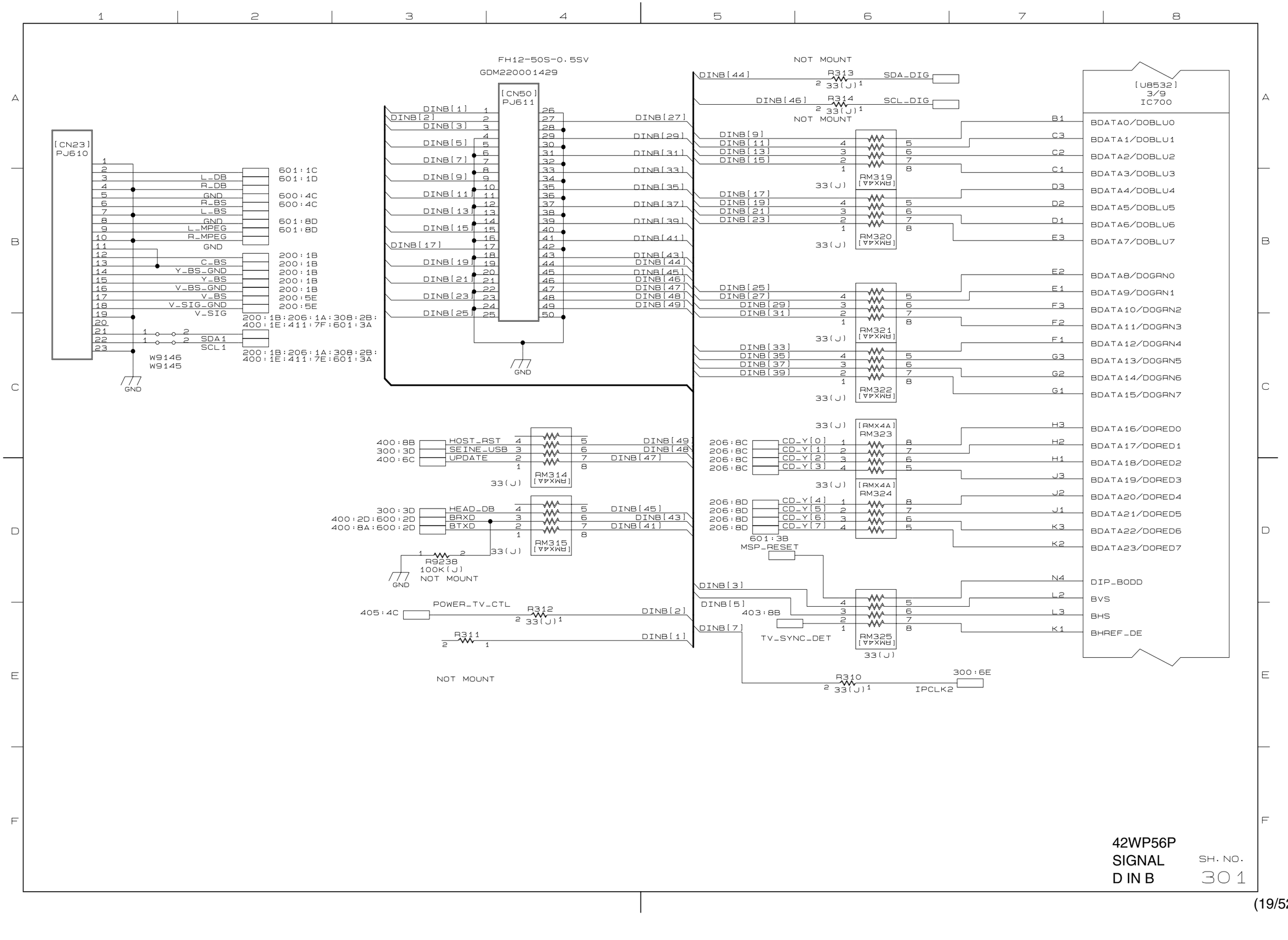

42WP56P
SIGNAL
D IN B

SH. NO.
301

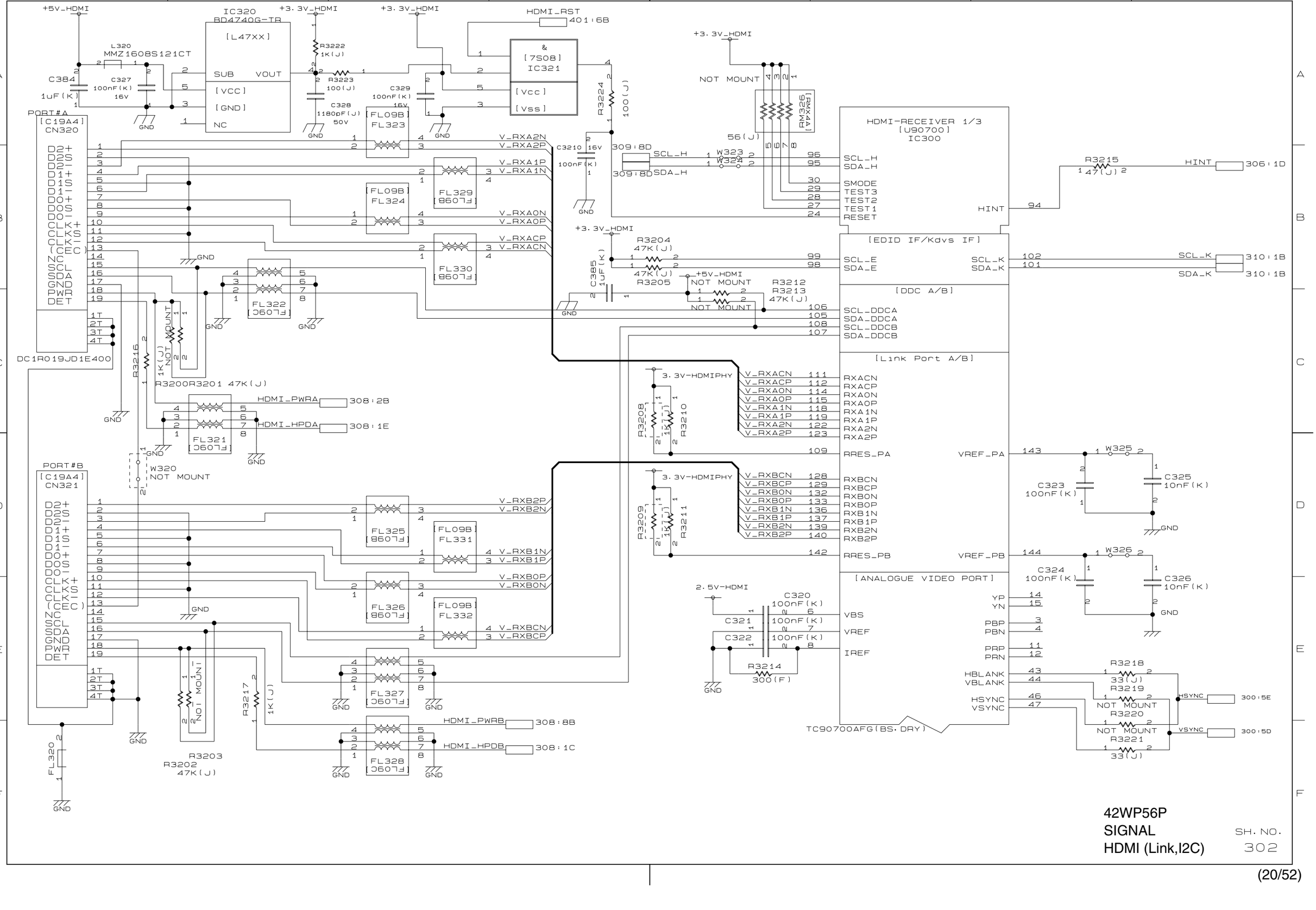

42WP56P
SIGNAL
HDMI (Link,I2C)

SH. NO.
302

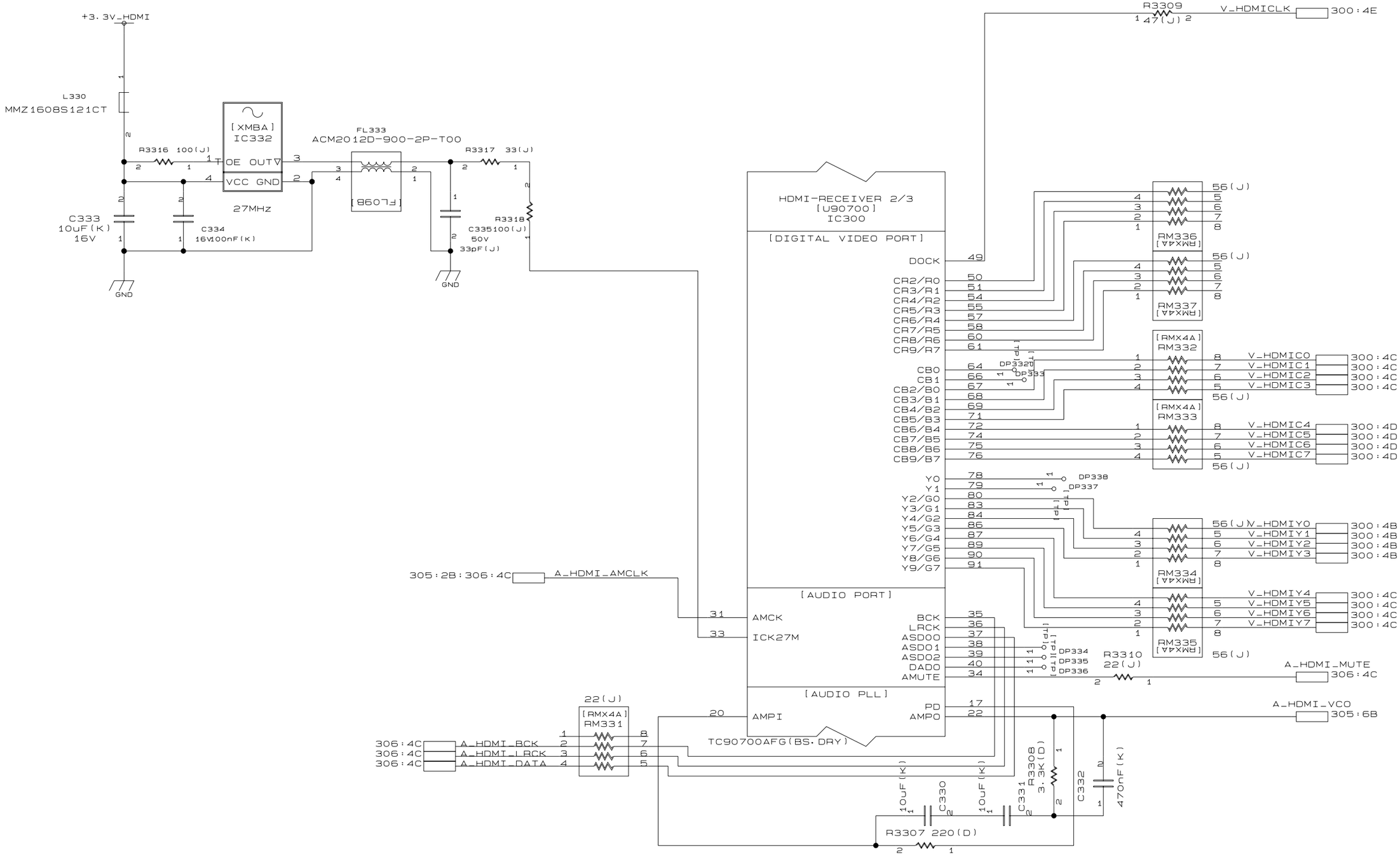

42WP56P
SIGNAL
HDMI Rx#2 (Video/Audio)

SH. NO.
303

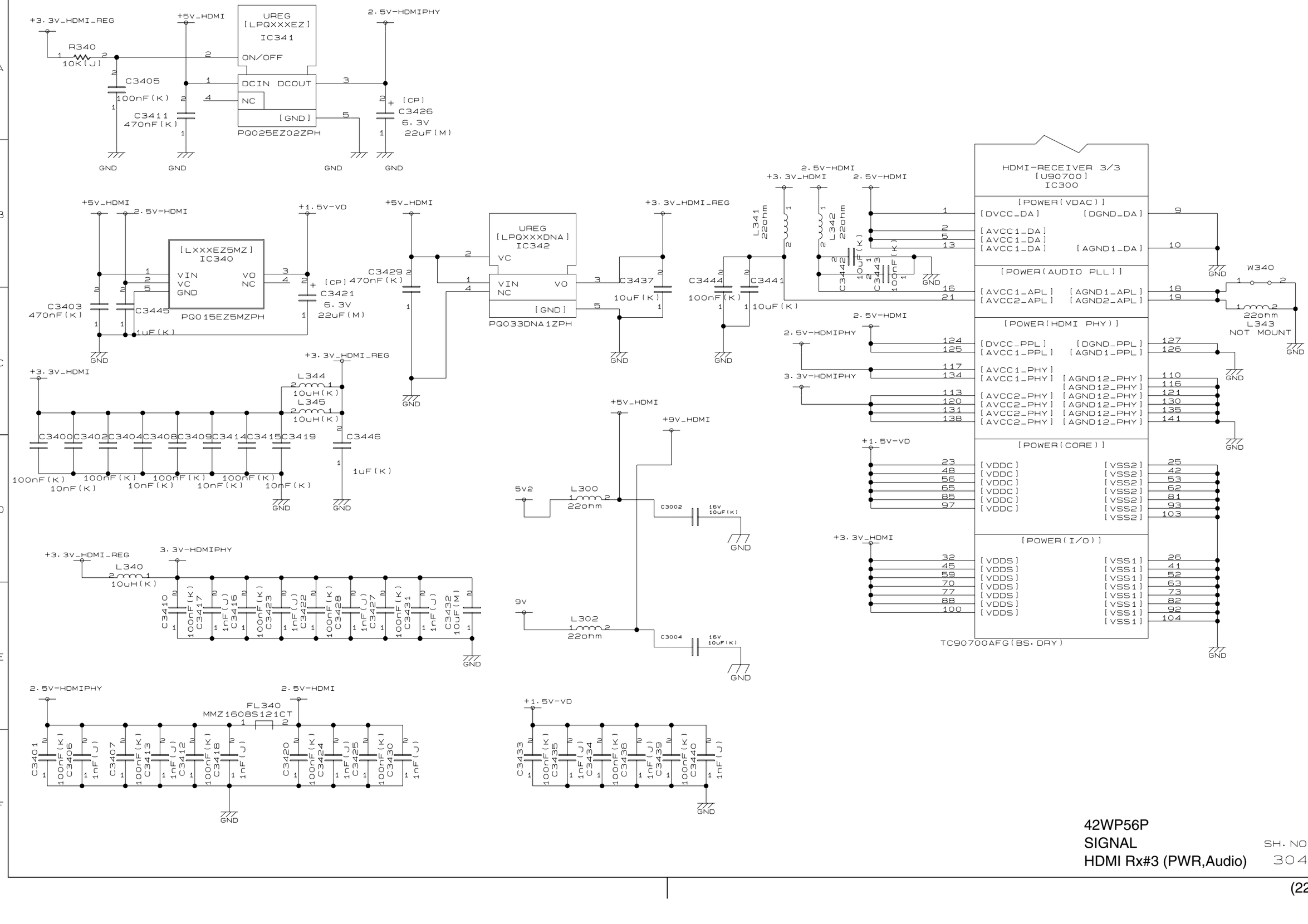

42WP56P
SIGNAL
HDMI Rx#3 (PWR,Audio)

SH. NO.
304

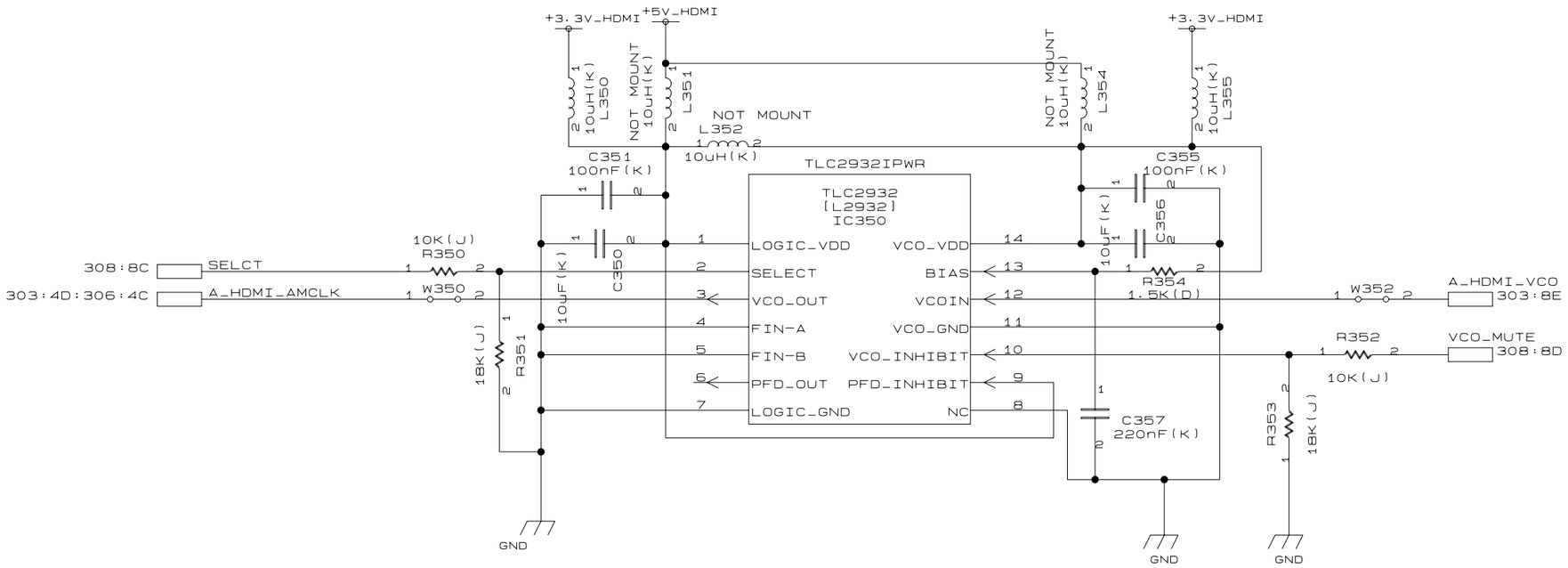

42WP56P
SIGNAL
HDMI AUDIO PLL

SH. NO. 305

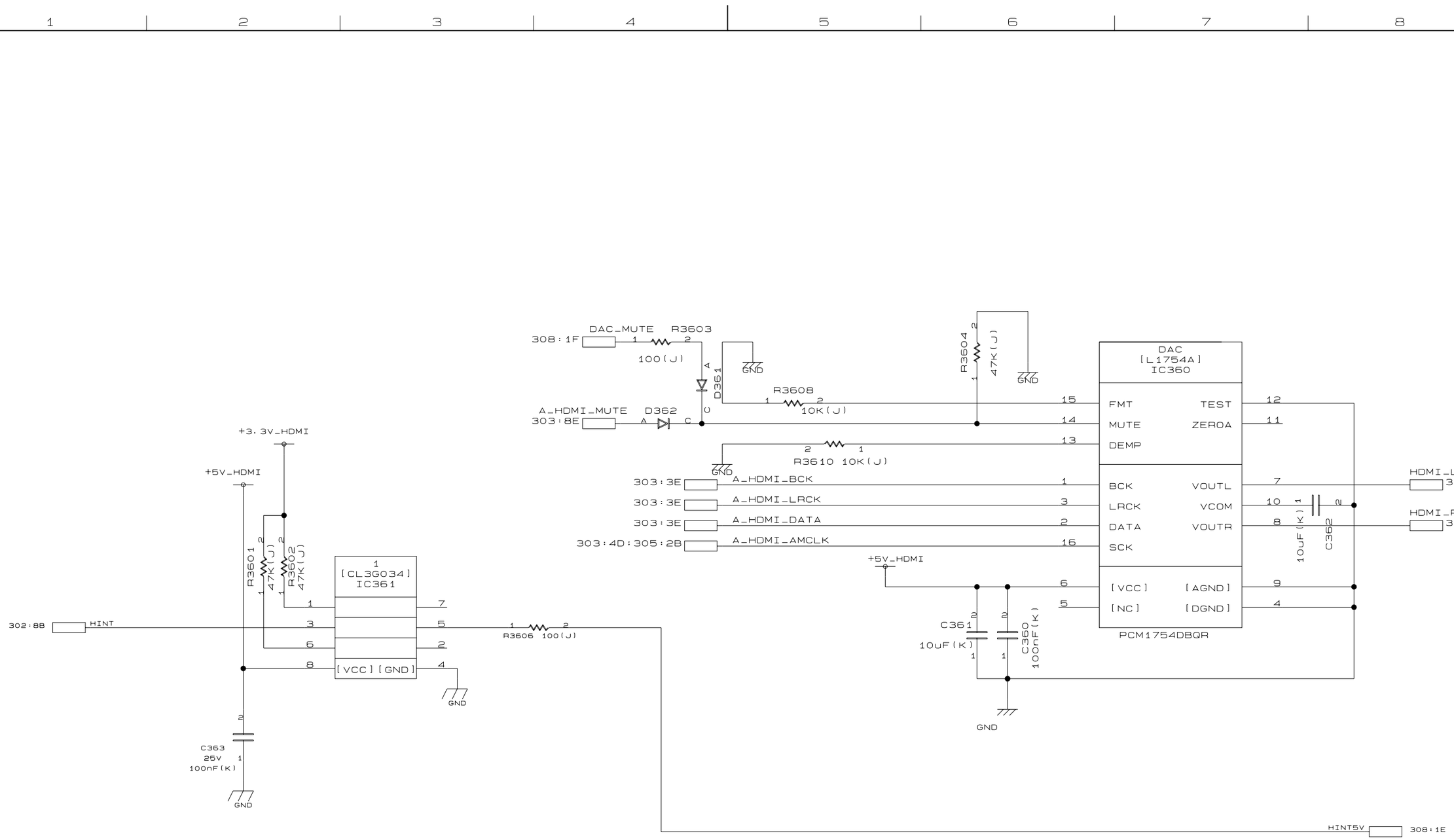

42WP56P
SIGNAL
HDMI AUDIO DAC

SH. NO.
306

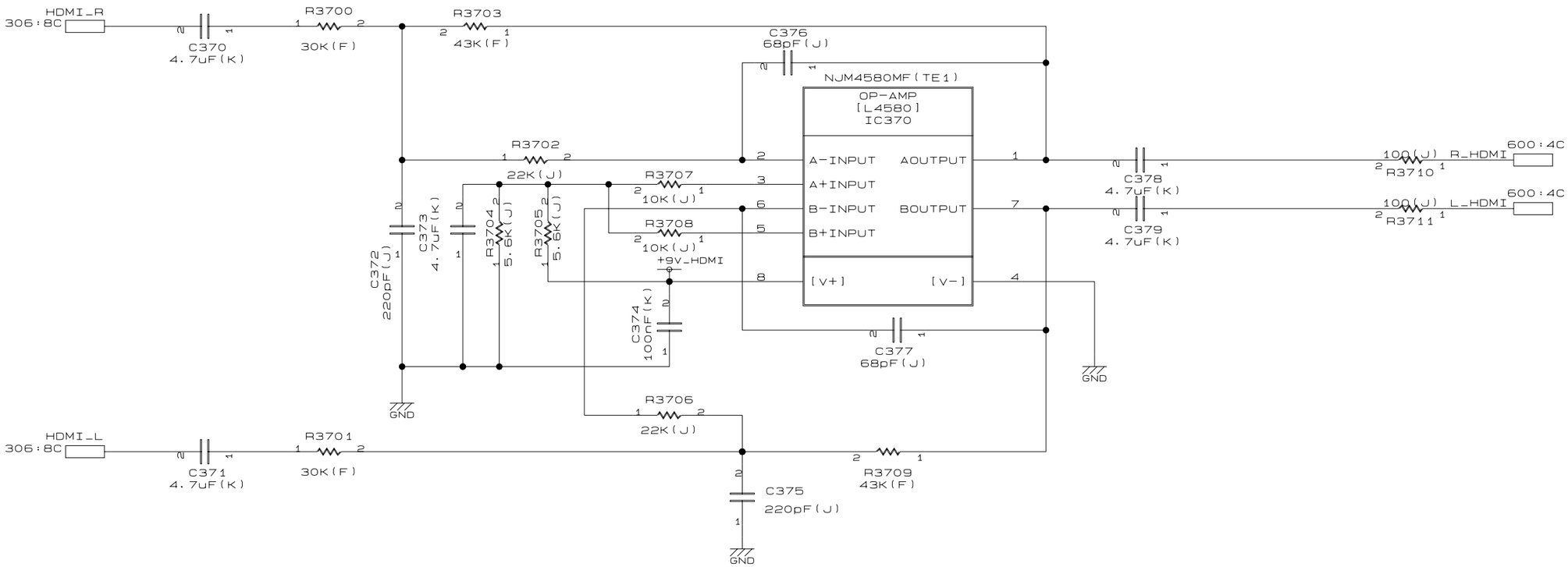

42WP56P
SIGNAL
HDMI AUDIO OUT

SH. NO.
307

+5V_HDMI

L380
MMZ1608S121CT

R3802
4.7K(J)

[TRNC]
Q380

302:2C HDMI_PWRA

DTC144EUAT106

GND

W3805 — SCL_HDMI — 309:1B

W3806 — SDA_HDMI — 309:1B

R3846
4.7K(J)

[TRNC]
Q381

HDMI_PWRB — 302:4F

DTC144EUAT106

GND

W3807

W3808

200:1B:206:1A:301:2C:400:1E:411:7E:601:3A SCL1

SDA1 200:1B:206:1A:301:2C:400:1E:411:7F:601:3A

R3810 10K(J) NOT MOUNT
R3811 10K(J) NOT MOUNT
R3812 10K(J) NOT MOUNT

I/O
[U62320]
IC384

SCL
SDA
CS2
CS1
CS0
D0 D1 D2 D3 D4 D5 D6 D7
SO
[VDD] [GND]

SELCT — 305:2B

VCO_MUTE — 305:6C

IC380
TC7S08FU(TE85L.F)

HDMI_HPDB
302:4F

&
[7S08]
[Vcc]
[Vss]

R3807 10K(J)
R3808 10K(J)
R3809 10K(J)
4XH

C380 100nF(K)

C382 10uF(K) 16V

C383 100nF(K)

GND

IC381
TC7S08FU(TE85L.F)

HDMI_HPDA
302:2C

C381 100nF(K)

306:8E HINT5V

306:4B DAC_MUTE

42WP56P
SIGNAL
HDMI CONTROLLER

SH. NO. 308

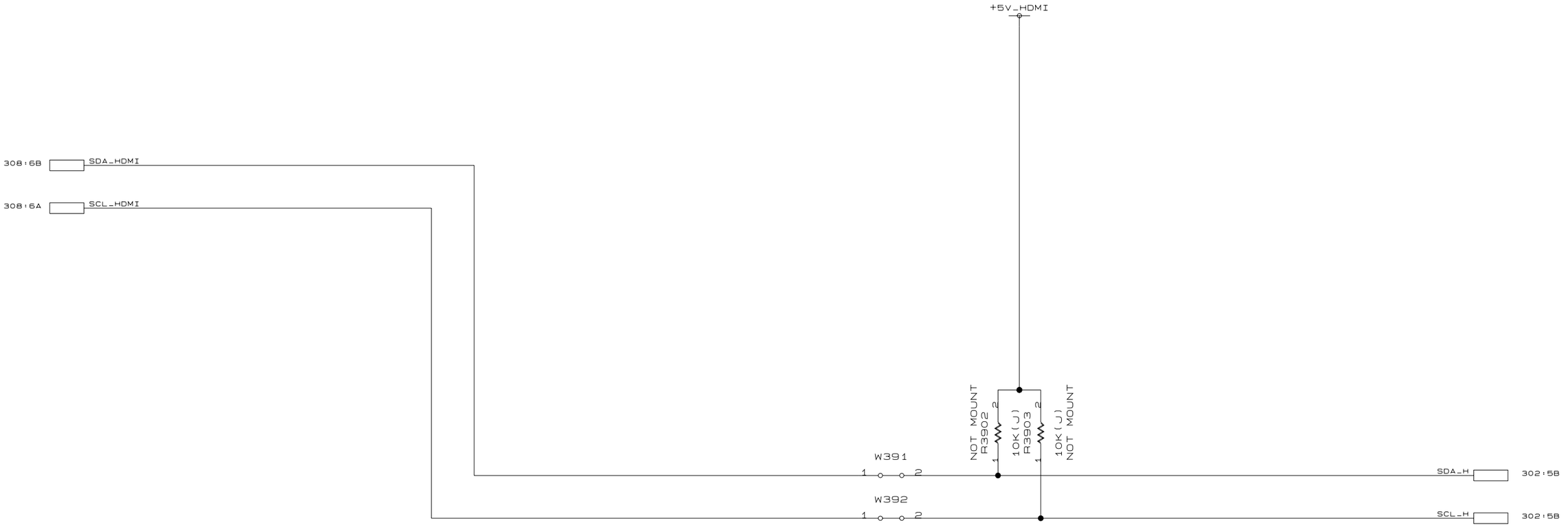

42WP56P
SIGNAL
EEPROM1

SH. NO.
309

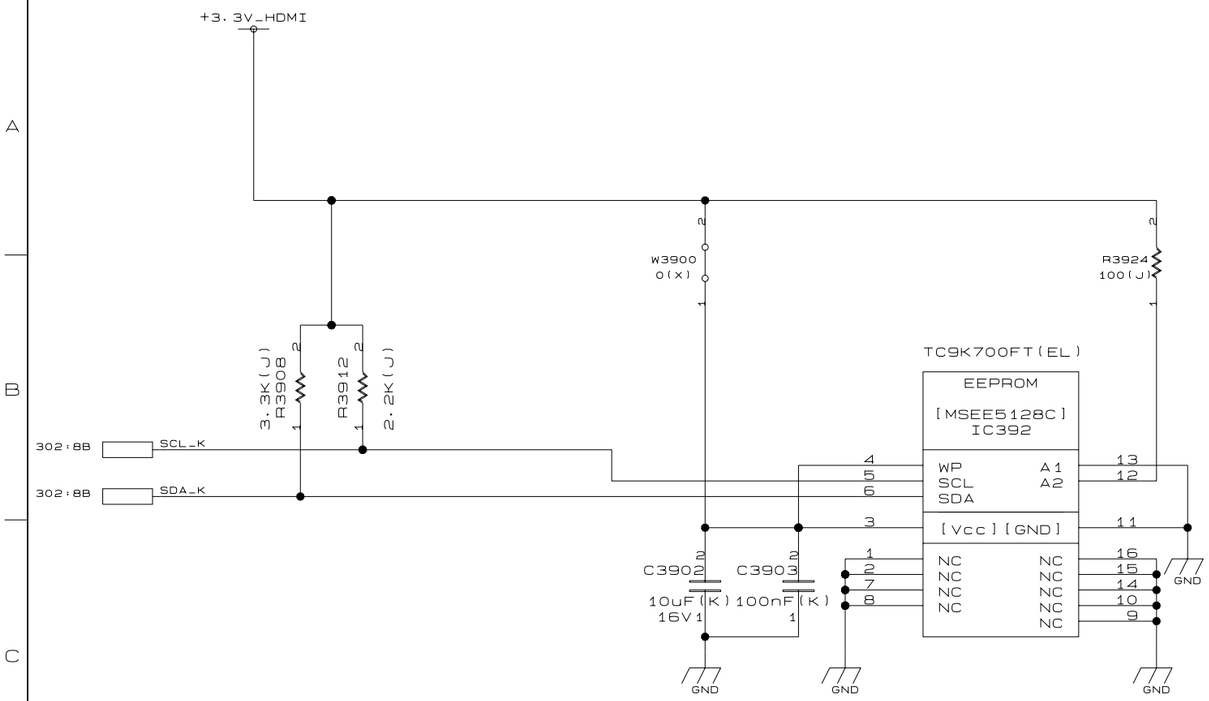

42WP56P
SIGNAL
EEPROM2

SH. NO.
310

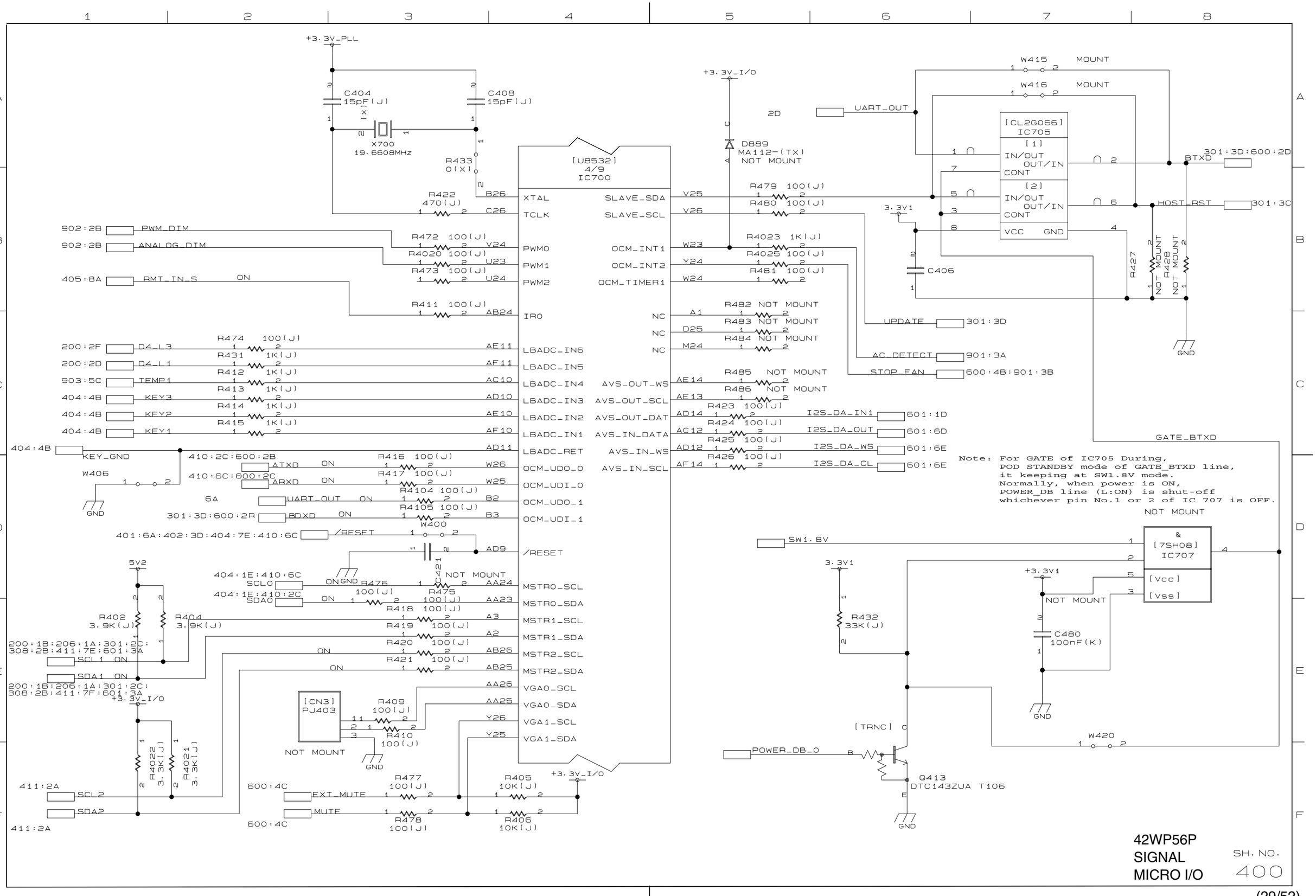
+3.3V_PLL
C404 15pF(J)
C408 15pF(J)
X700 19.6608MHz
R433 0(X)
R422 470(J)
[U8532] 4/9 IC700
XTAL
TCLK
SLAVE_SDA
SLAVE_SCL
+3.3V_I/O
D889 MA112-(TX) NOT MOUNT
R479 100(J)
R480 100(J)
W415 MOUNT
W416 MOUNT
UART_OUT
[CL2G066] IC705
[1] IN/OUT OUT/IN CONT
[2] IN/OUT OUT/IN CONT
VCC GND
BTXD
HOST_BST
3.3V1
C406
R427
R428 NOT MOUNT
GND
902:2B PWM_DIM
902:2B ANALOG_DIM
405:8A RMT_IN_S ON
R472 100(J)
R4020 100(J)
R473 100(J)
R411 100(J)
PWM0
PWM1
PWM2
IRO
OCM_INT1
OCM_INT2
OCM_TIMER1
R4023 1K(J)
R4025 100(J)
R481 100(J)
UPDATE
AC_DETECT
STOP_FAN
R482 NOT MOUNT
R483 NOT MOUNT
R484 NOT MOUNT
NC
200:2F D4_L3
200:2D D4_L1
903:5C TEMP1
404:4B KEY3
404:4B KEY2
404:4B KEY1
404:4B KEY_GND
R474 100(J)
R431 1K(J)
R412 1K(J)
R413 1K(J)
R414 1K(J)
R415 1K(J)
LBADC_IN6
LBADC_IN5
LBADC_IN4
LBADC_IN3
LBADC_IN2
LBADC_IN1
LBADC_RET
AVS_OUT_WS
AVS_OUT_SCL
AVS_OUT_DAT
AVS_IN_DATA
AVS_IN_WS
AVS_IN_SCL
R485 NOT MOUNT
R486 NOT MOUNT
R423 100(J)
R424 100(J)
R425 100(J)
R426 100(J)
I2S_DA_IN1
I2S_DA_OUT
I2S_DA_WS
I2S_DA_CL
601:1D
601:6D
601:6E
601:6E
GATE_BTXD
Note: For GATE of IC705 During,
POD STANDBY mode of GATE_BTXD line,
it keeping at SW1.8V mode.
Normally, when power is ON,
POWER_DB line (L:ON) is shut-off
whichever pin No.1 or 2 of IC 707 is OFF.
W406
410:2C:600:2B ATXD ON
410:6C:600:2C ARXD ON
6A UART_OUT ON
301:3D:600:2R BDXD ON
R416 100(J)
R417 100(J)
R4104 100(J)
R4105 100(J)
W400
W26
W25
B2
B3
OCM_UDO_0
OCM_UDI_0
OCM_UDO_1
OCM_UDI_1
401:6A:402:3D:404:7E:410:6C /RESET
/RESET
AD9
C421 NOT MOUNT
5V2
404:1E:410:6C SCL0
404:1E:410:2C SDA0
R476 100(J)
R475 100(J)
R418 100(J)
R419 100(J)
R420 100(J)
R421 100(J)
MSTR0_SCL
MSTR0_SDA
MSTR1_SCL
MSTR1_SDA
MSTR2_SCL
MSTR2_SDA
R402 3.9K(J)
R404 3.9K(J)
200:1B:206:1A:301:2C:
308:2B:411:7E:601:3A
SCL1 ON
SDA1 ON
200:1B:206:1A:301:2C:
308:2B:411:7F:601:3A
+3.3V_I/O
R4022 3.3K(J)
R4021 3.3K(J)
[CN3] PJ403
NOT MOUNT
R409 100(J)
R410 100(J)
VGA0_SCL
VGA0_SDA
VGA1_SCL
VGA1_SDA
411:2A SCL2
411:2A SDA2
600:4C EXT_MUTE
600:4C MUTE
R477 100(J)
R478 100(J)
R405 10K(J)
R406 10K(J)
SW1.8V
3.3V1
R432 33K(J)
C480 100nF(K)
&
[7SH08] IC707
[Vcc]
[Vss]
[TRNC]
POWER_DB_O
Q413 DTC143ZUA T106
W420
42WP56P
SIGNAL
MICRO I/O
SH. NO.
400

402:3A:409:1B

/OCM_RE, /OCM_WE, /ROM_CS, OCMADDR[0-20], OCMDATA[0-7]

/RESET

[U8532]
7/9
IC700

R487 33(J)
R440 33(J)

OCMADDR[20]
OCMADDR[19]
OCMADDR[18]
OCMADDR[17]
OCMADDR[16]
OCMADDR[15]
OCMADDR[14]
OCMADDR[13]
OCMADDR[12]
OCMADDR[11]
OCMADDR[10]
OCMADDR[9]
OCMADDR[8]
OCMADDR[7]
OCMADDR[6]
OCMADDR[5]
OCMADDR[4]
OCMADDR[3]
OCMADDR[2]
OCMADDR[1]
OCMADDR[0]

RM400 [RMX4A] 33(J)
RM401 [RMX4A] 33(J)
RM402 [RMX4A] 33(J)
RM403 [RMX4A] 33(J)
RM404 [RMX4A] 33(J)

AF15	OCMADDR21	PBIAS	U26
AE15	OCMADDR20	PPWR	U25
AD15	OCMADDR19		
AC15	OCMADDR18	GPIO47	R25
AF16	OCMADDR17	GPIO46	R24
AE16	OCMADDR16	GPIO45	R23
AD16	OCMADDR15	GPIO44	T26
AF17	OCMADDR14	JTAG_BS_TDO	T25
AE17	OCMADDR13	JTAG_BS_TMS	T24
AD17	OCMADDR12		
AC17	OCMADDR11	OCMCS2n	AC24
AF18	OCMADDR10	OCMCS1n	AD26
AE18	OCMADDR9	OCMCS0n	AD25
AD18	OCMADDR8	ROMCSn	AD24
AF19	OCMADDR7	OCMWEn	AC26
AE19	OCMADDR6	OCMREn	AC25
AD19	OCMADDR5		
AC19	OCMADDR4	OCMDATA0	AE26
AF20	OCMADDR3	OCMDATA1	AE25
AE20	OCMADDR2	OCMDATA2	AE24
AD20	OCMADDR1	OCMDATA3	AF26
AF21	OCMADDR0	OCMDATA4	AF25
		OCMDATA5	AF24
		OCMDATA6	AC23
		OCMDATA7	AD23
		OCMDATA8	AE23
		OCMDATA9	AF23
		OCMDATA10	AD22
		OCMDATA11	AE22
		OCMDATA12	AF22
		OCMDATA13	AC21
		OCMDATA14	AD21
		OCMDATA15	AE21

R441 100(J) U26 — BL_ONOFF — 902:4D
R442 100(J) U25 — POWER_LCD — 901:3B
R443 100(J) R25 — D4_SW — 200:4D
R444 100(J) NOT MOUNT R24
R445 100(J) R23 — HDMI_RST — 302:4A
R446 100(J) T26 — POWER_KEY_S — 405:8A
R447 100(J) T25 — GP1 — 200:1C
R448 100(J) T24 — BS_TV_MUTE — 600:4C
R488 100(J) AC24 — USB — 300:1D
R489 100(J) AD26 — MAIN_SYNC_DET — 403:8E
R449 1K(J) AD25 — D4_L2 — 200:2E

[RMX4A] RM407 33(J): AD24 → /ROM_CS; AC26 → /OCM_WE; AC25 → /OCM_RE

[RMX4A] RM405 33(J): AE26 → OCMDATA[0]; AE25 → OCMDATA[1]; AE24 → OCMDATA[2]; AF26 → OCMDATA[3]

[RMX4A] RM406 33(J): AF25 → OCMDATA[4]; AF24 → OCMDATA[5]; AC23 → OCMDATA[6]; AD23 → OCMDATA[7]

R4029 100(J) AE23 — SW_DVI1 — 600:4B
R4030 100(J) AF23 — AV/S_DET2 — 200:4F
R4031 100(J) NOT MOUNT (AV/S DET3)
R4032 1K(J) AD22
R4033 100(J) AE22 — POWER_SIG_DET — 300:4E:411:2E:901:3B
R4034 100(J) AF22 — SW_DVI2 — 600:4B
R4035 100(J) AC21 — LED3 — 404:8B
R4036 100(J) AD21 — LED4 — 404:8B
50HZ_60HZ AE21 — 903:1A

NOT MOUNT
+3.3V1
C4014 100nF(K) NOT MOUNT
[7SH08] IC421 & [Vcc] [Vss]
GND
W417 NOT MOUNT
STBY_RST — 405:3E
+3.3V_I/O
R40710K(J)
R4118 10K(J) NOT MOUNT
R4119 10K(J) NOT MOUNT
GND

+3.3V_I/O
R4025 1K(J)
[TRP] Q404 2SA1586-Y(TE85L.F)
R4027 1K(J)
R4028 47K(J)
C478 470pF(J)
GND

5V2
BD5245G-TR
[LBD52XXA] IC424
CT VOUT [VCC] [GND] NC
C4020 100nF(K) 16V
C4019 4.7nF(K)
GND

42WP56P
SIGNAL
OCM MEMORY I/F

SH. NO. 401

401:1A:409:1B /OCM_RE. /OCM_WE. /ROM_CS. OCMADDR[0-20]. OCMDATA[0-7]

MX26LV160TTC-55G

[MFLV160C]
IC404

OCMADDR[1] 25
OCMADDR[2] 24
OCMADDR[3] 23
OCMADDR[4] 22
OCMADDR[5] 21
OCMADDR[6] 20
OCMADDR[7] 19
OCMADDR[8] 18
OCMADDR[9] 8
OCMADDR[10] 7
OCMADDR[11] 6
OCMADDR[12] 5
OCMADDR[13] 4
OCMADDR[14] 3
OCMADDR[15] 2
OCMADDR[16] 1
OCMADDR[17] 48
OCMADDR[18] 17
OCMADDR[19] 16
OCMADDR[20] 9

A0
A1
A2
A3
A4
A5
A6
A7
A8
A9
A10
A11
A12
A13
A14
A15
A16
A17
A18
A19

/ROM_CS 26 CEN
/OCM_RE 28 OEN
/OCM_WE 11 WEN
12 RPN
47 BYTEN

RY/BYN 15
NC 10
NC 13
NC 14

D0 29 OCMDATA[0]
D1 31 OCMDATA[1]
D2 33 OCMDATA[2]
D3 35 OCMDATA[3]
D4 38 OCMDATA[4]
D5 40 OCMDATA[5]
D6 42 OCMDATA[6]
D7 44 OCMDATA[7]
D8 30
D9 32
D10 34
D11 36
D12 39
D13 41
D14 43
D15/A-1 45 OCMADDR[0]

[Vcc] 37
[GND] 27
[GND] 46

GND
GND
GND
GND

400:3D:401:6A:404:7E:410:6C /RESET 1 2 W411 MOUNT

R4086 2.2K(J)

C464 NOT MOUNT

+3.3V_I/O

C410 10uF(K) 6.3V

C411 100nF(K) 16V

42WP56P
SIGNAL
FLASH MEMORY

SH. NO.
402

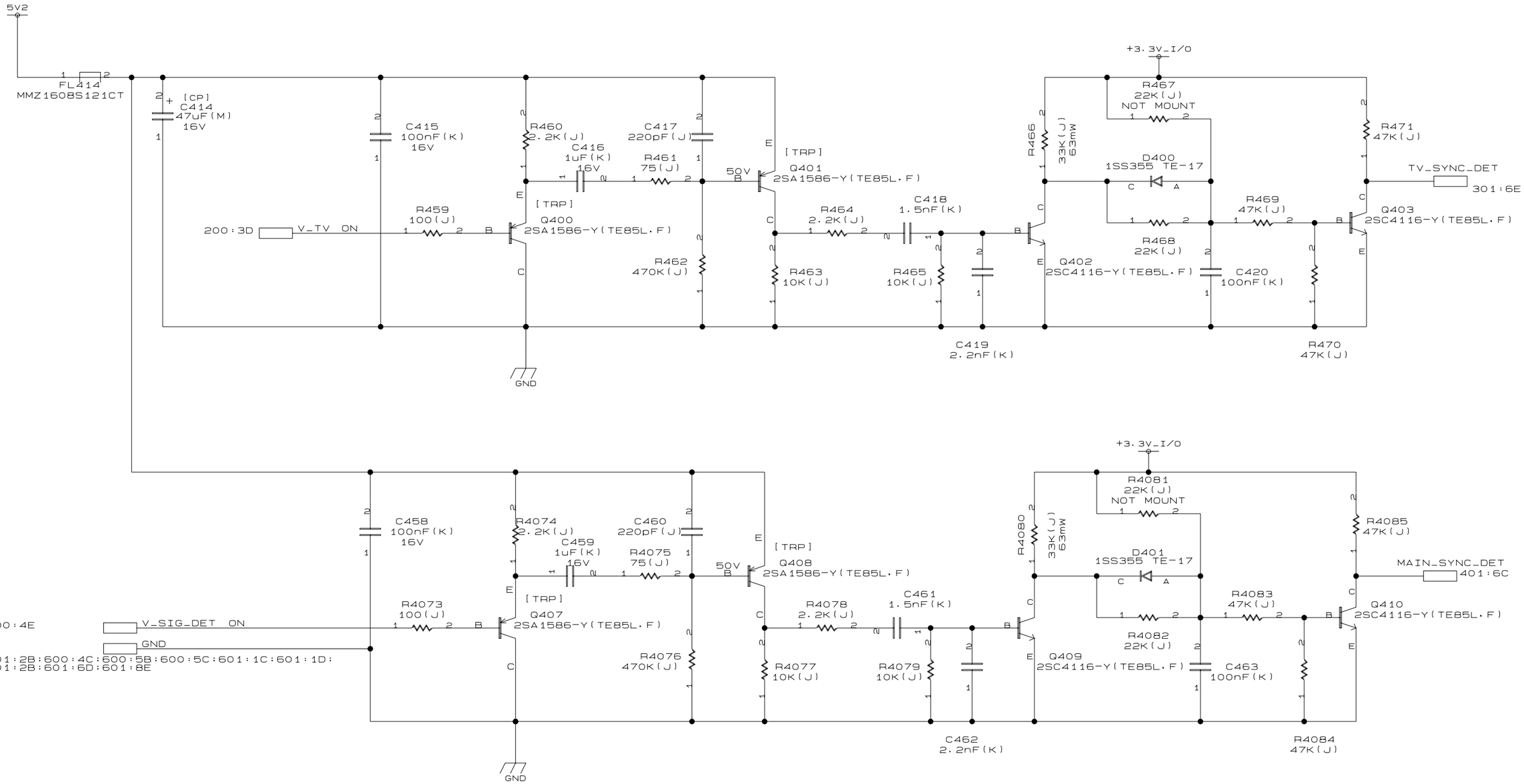

42WP56P
SIGNAL SYNC SEPA

SH. NO. 403

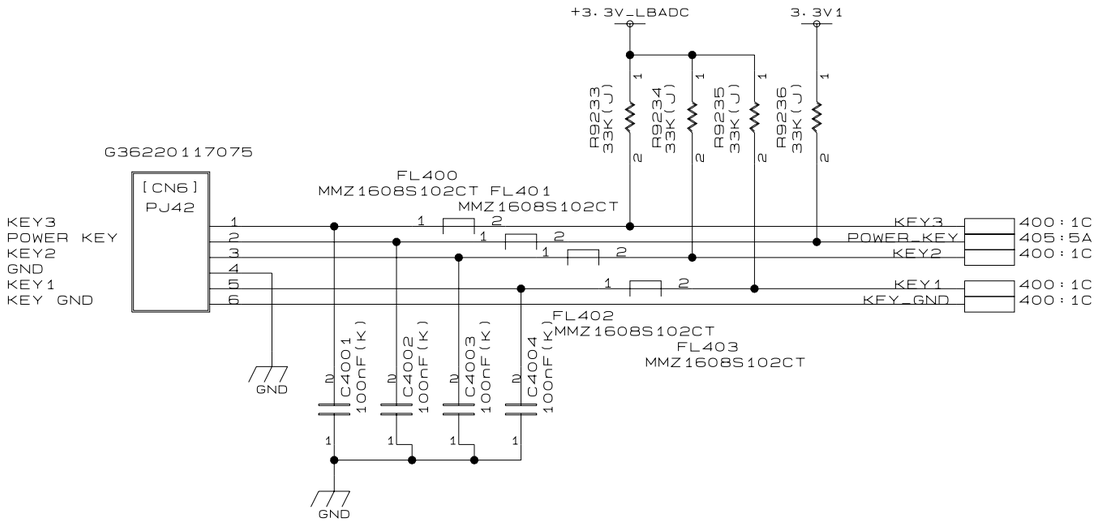

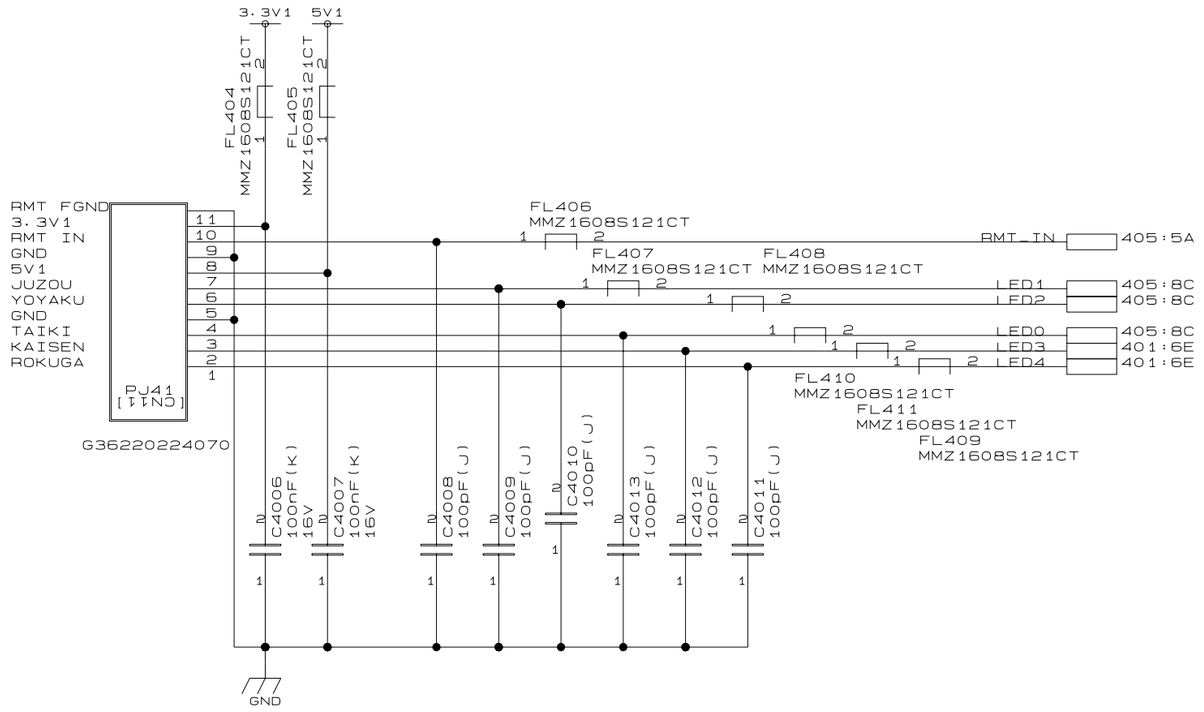

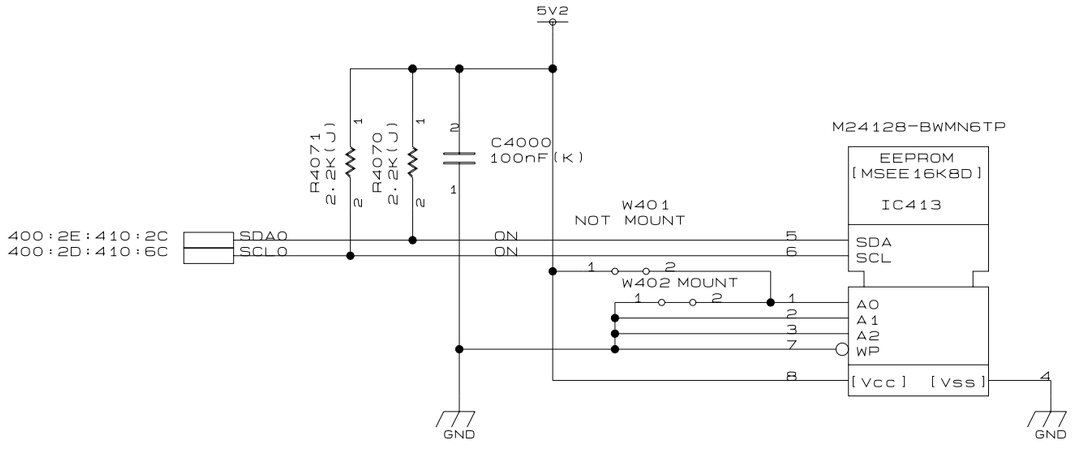

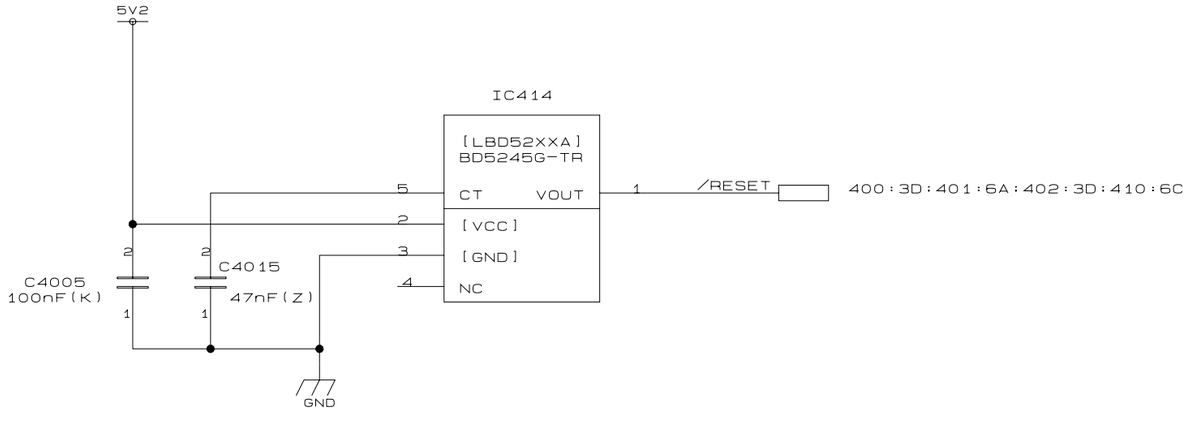

42WP56P
SIGNAL
E2P OTHER

SH. NO. 404

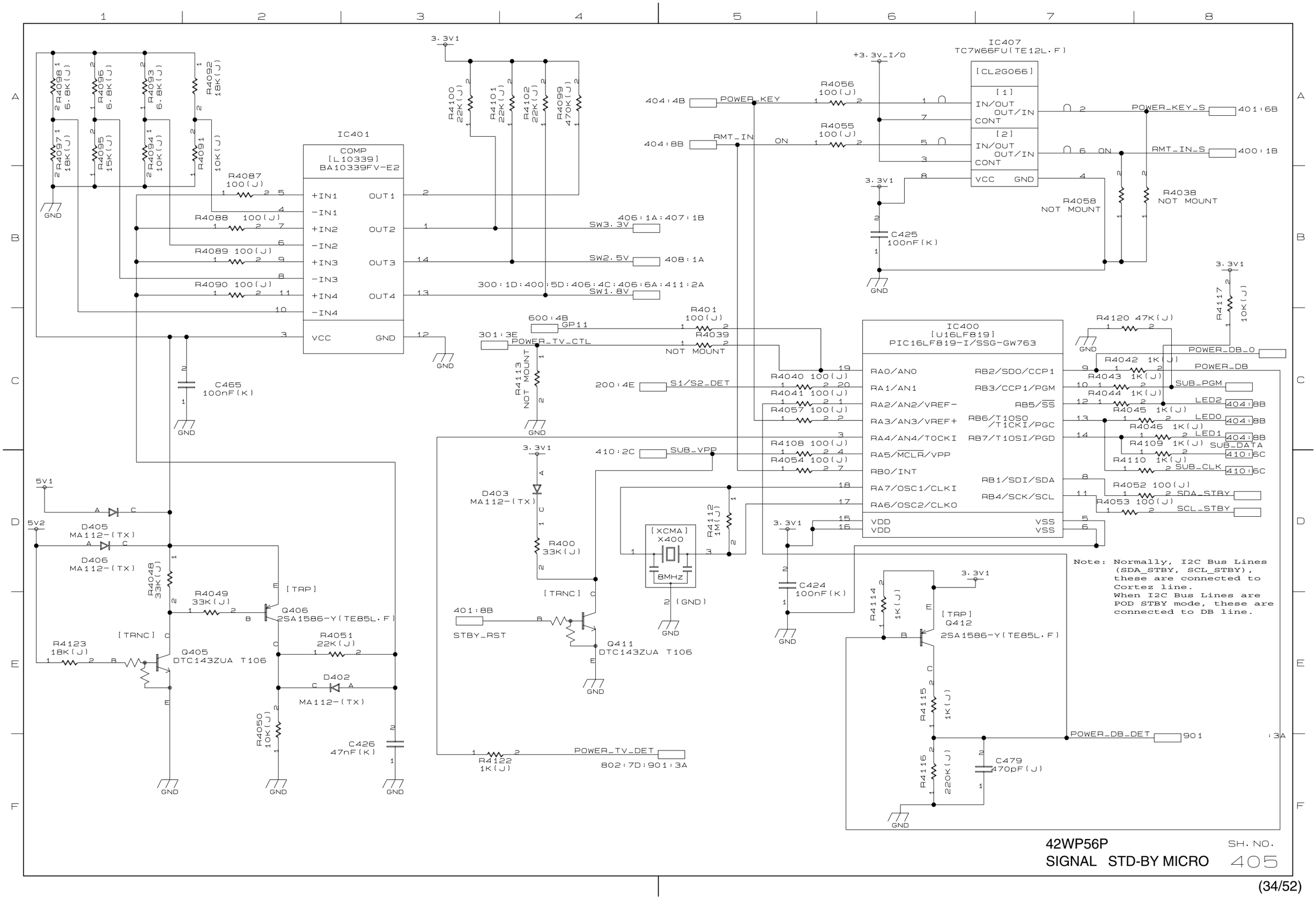

42WP56P

SIGNAL STD-BY MICRO

SH. NO. 405

405:4B:407:1B

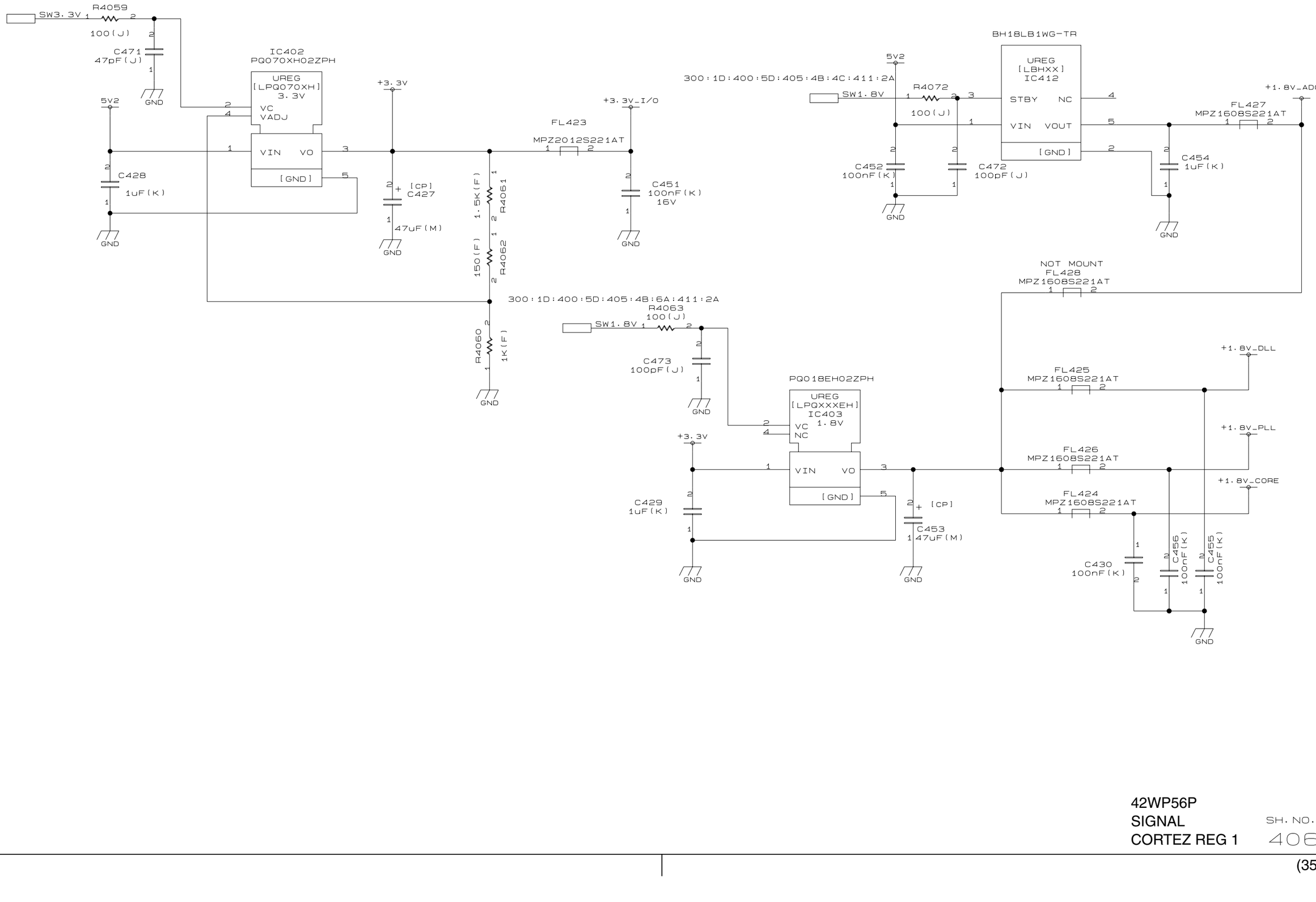

42WP56P
SIGNAL
CORTEZ REG 1

SH. NO.
406

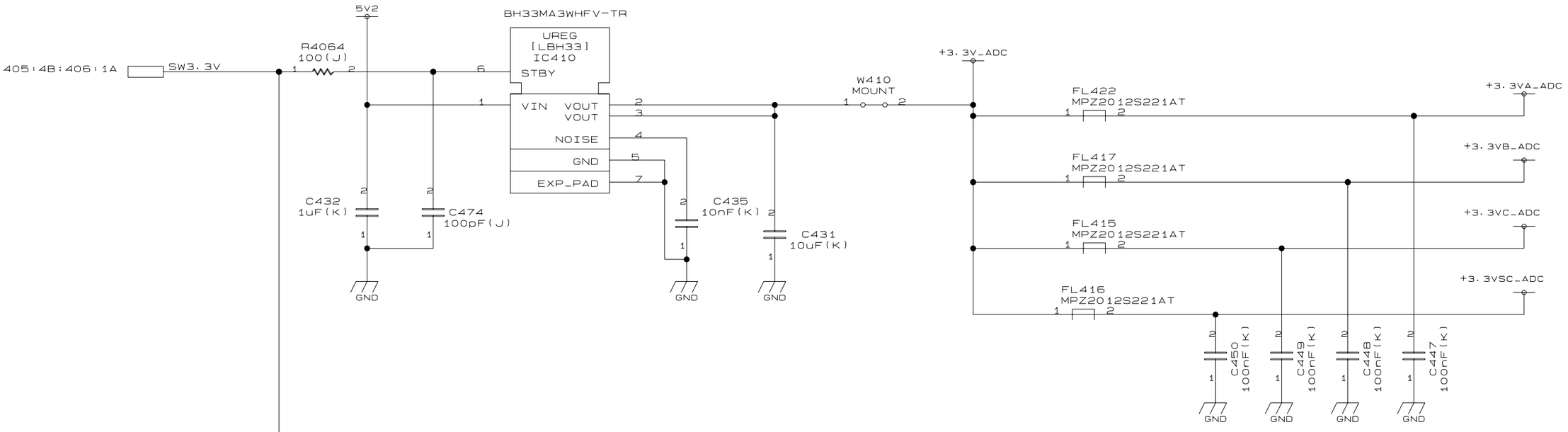

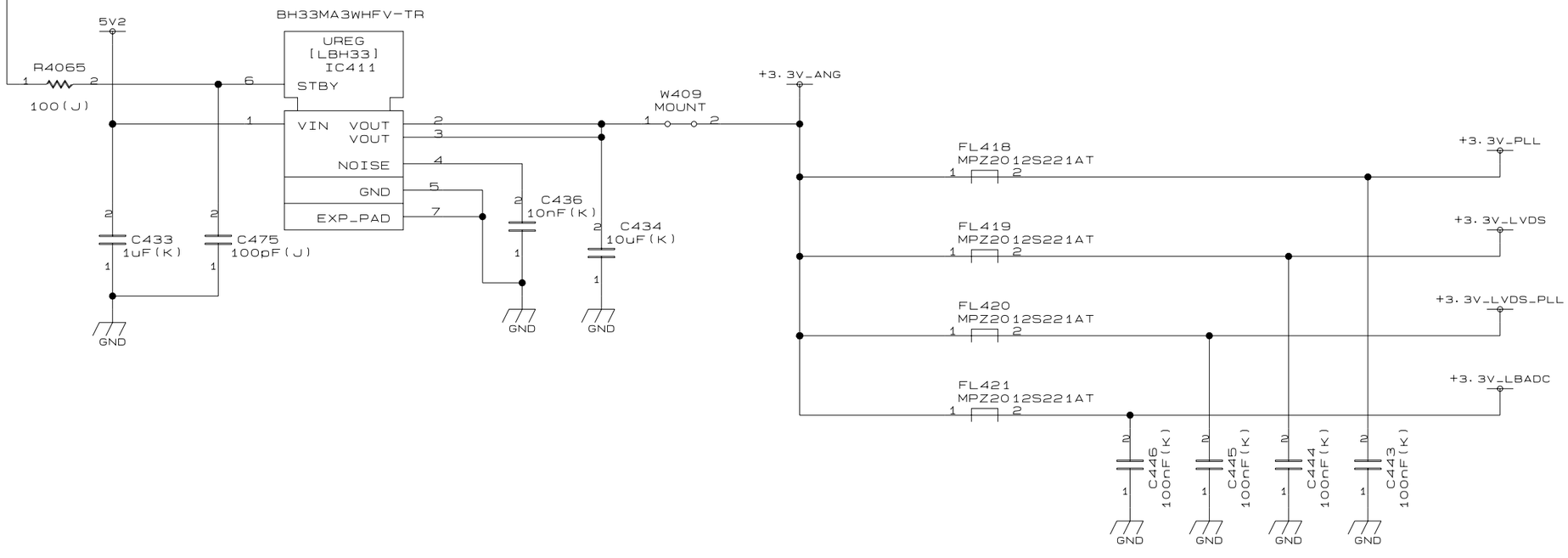

42WP56P
SIGNAL
CORTEZ REG 2

SH. NO.
407

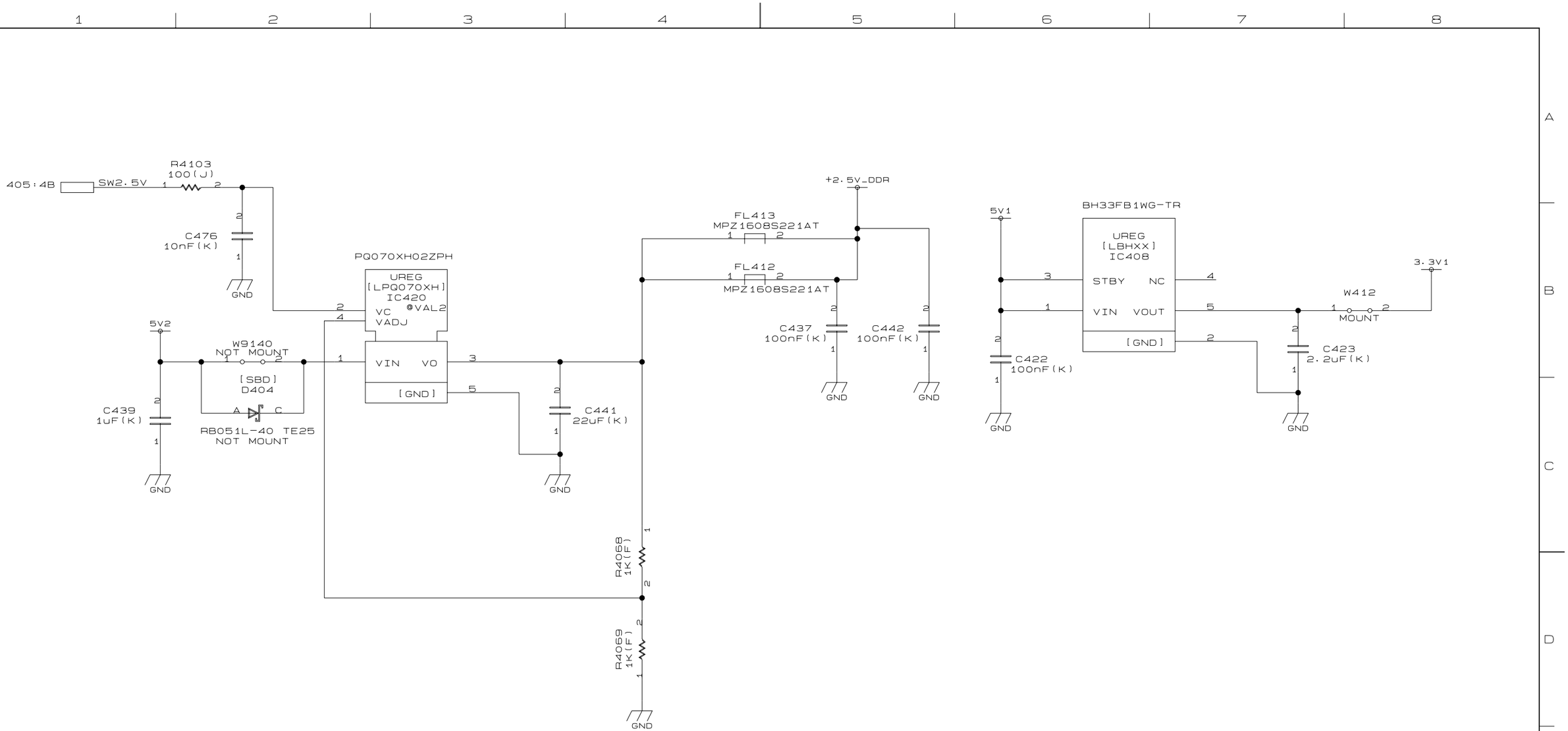

42WP56P
SIGNAL
CORTEZ REG 3

SH. NO.
408

401:1A:402:3A

OCMADDR[0-19]

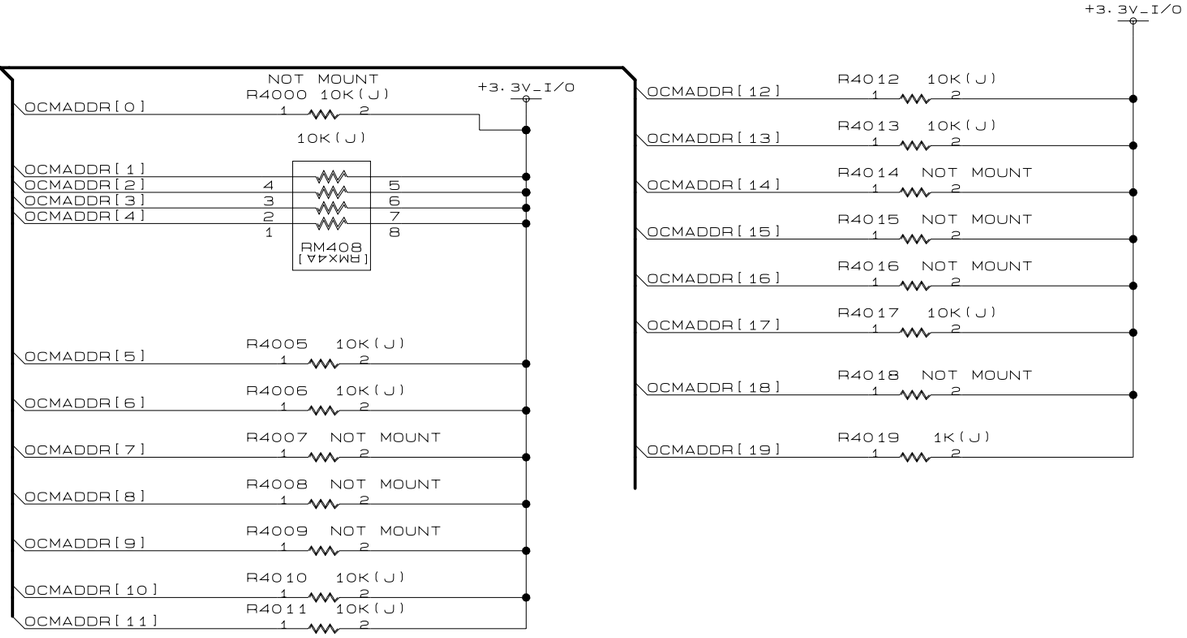

42WP56P
SIGNAL
BOOT CONFIG

SH. NO.
409

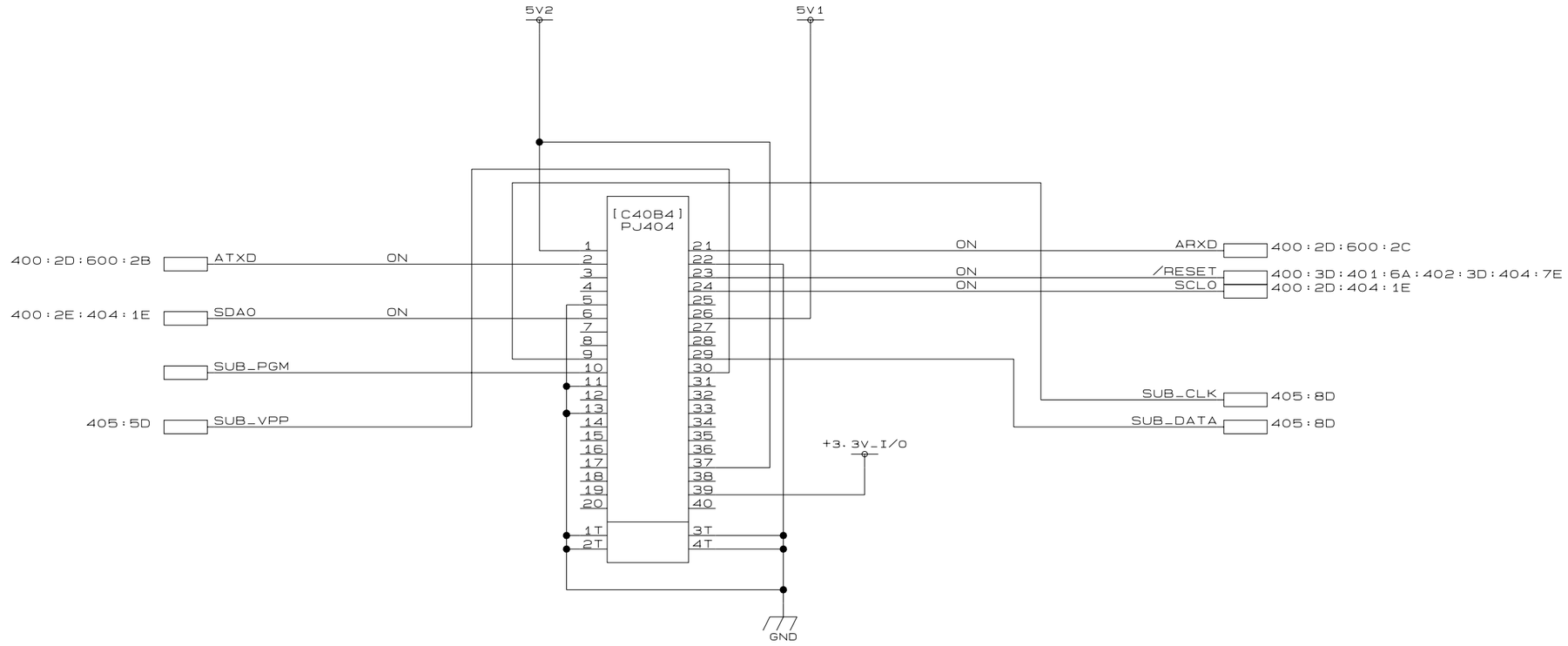

42WP56P
SIGNAL
SERVICE CONNECTOR

SH. NO.
410

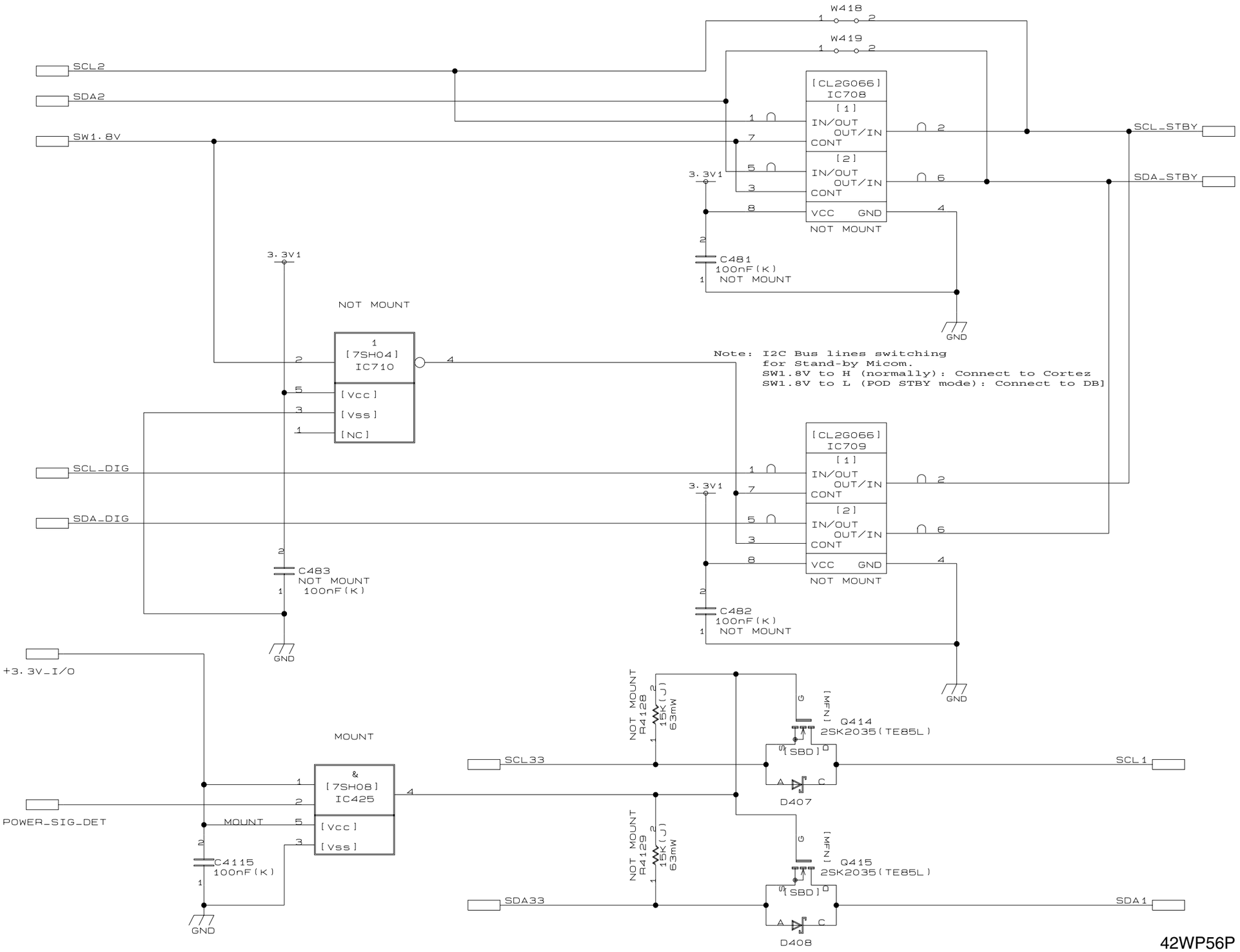

42WP56P
SIGNAL
I2C Switch

SH. NO.
411

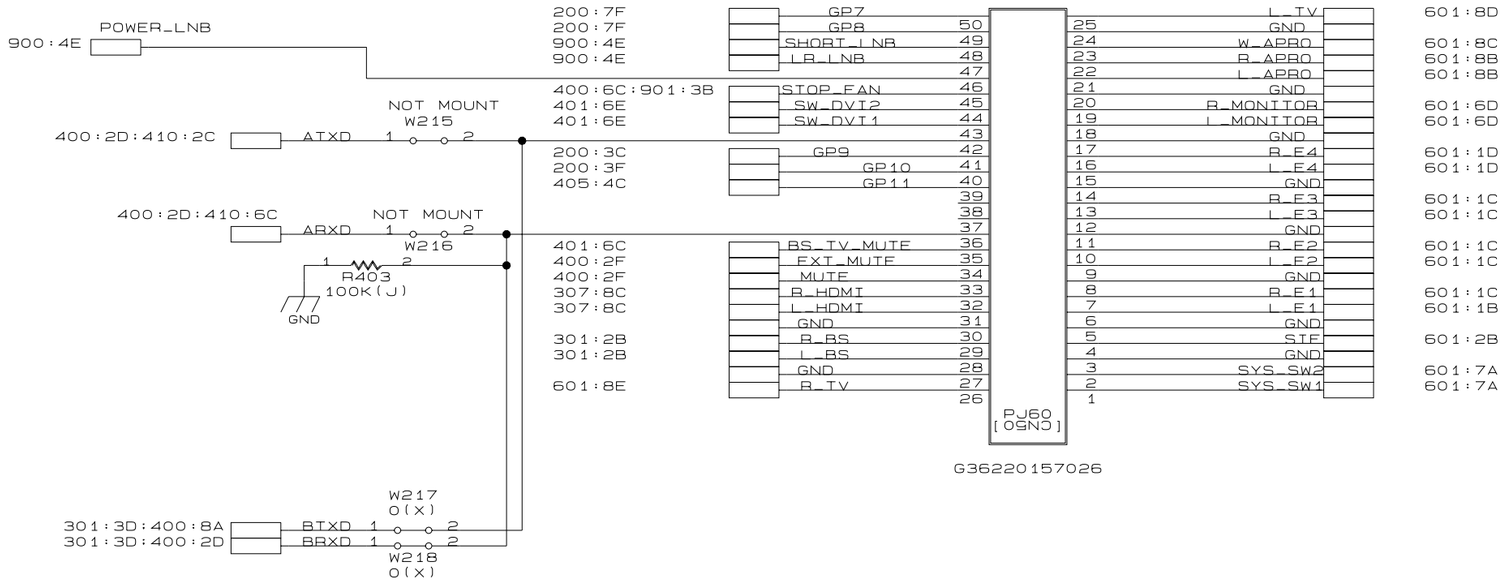

G36220157026

42WP56P
SIGNAL
AUDIO

SH. NO.
600

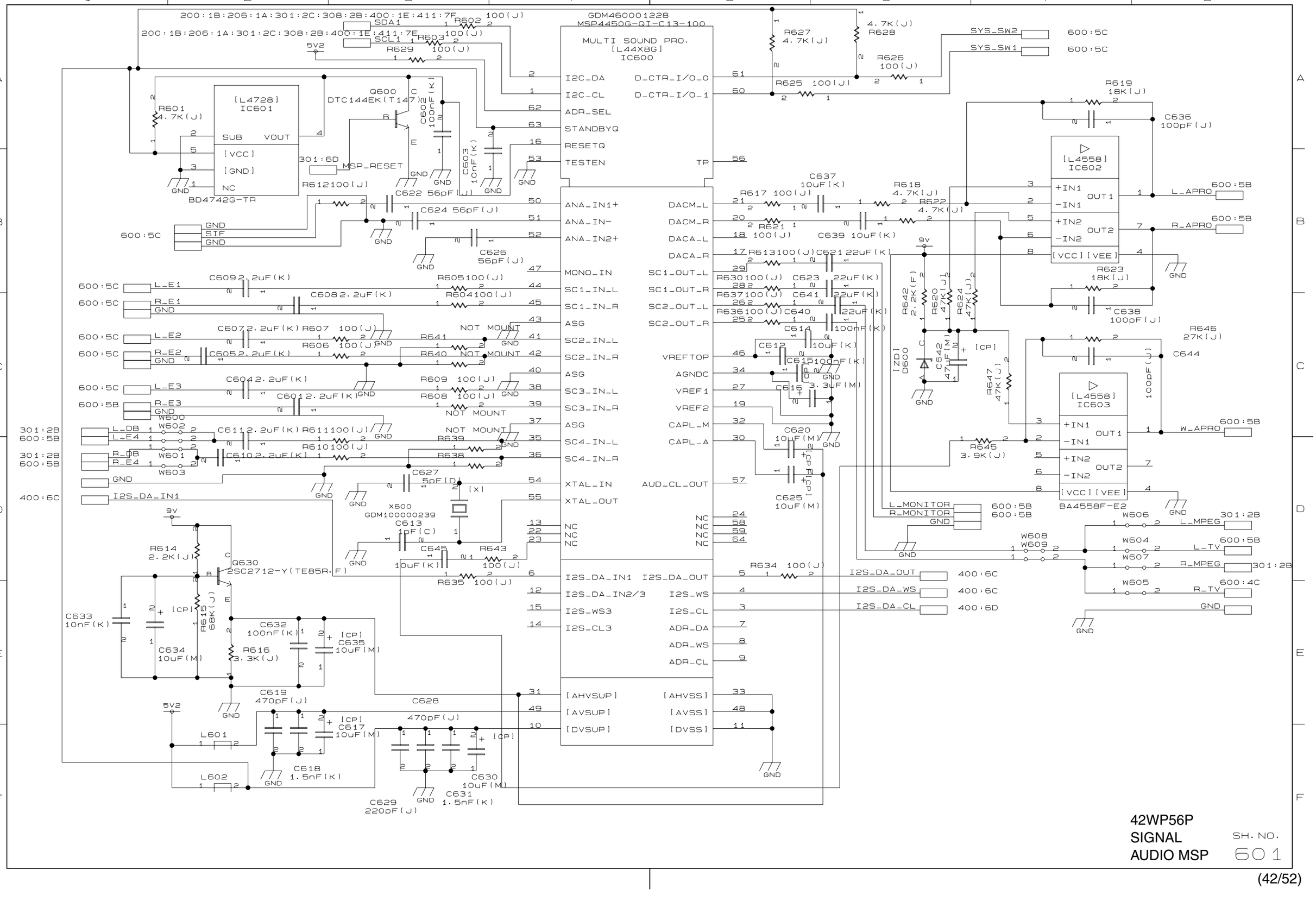

42WP56P
SIGNAL
AUDIO MSP

SH. NO.
601

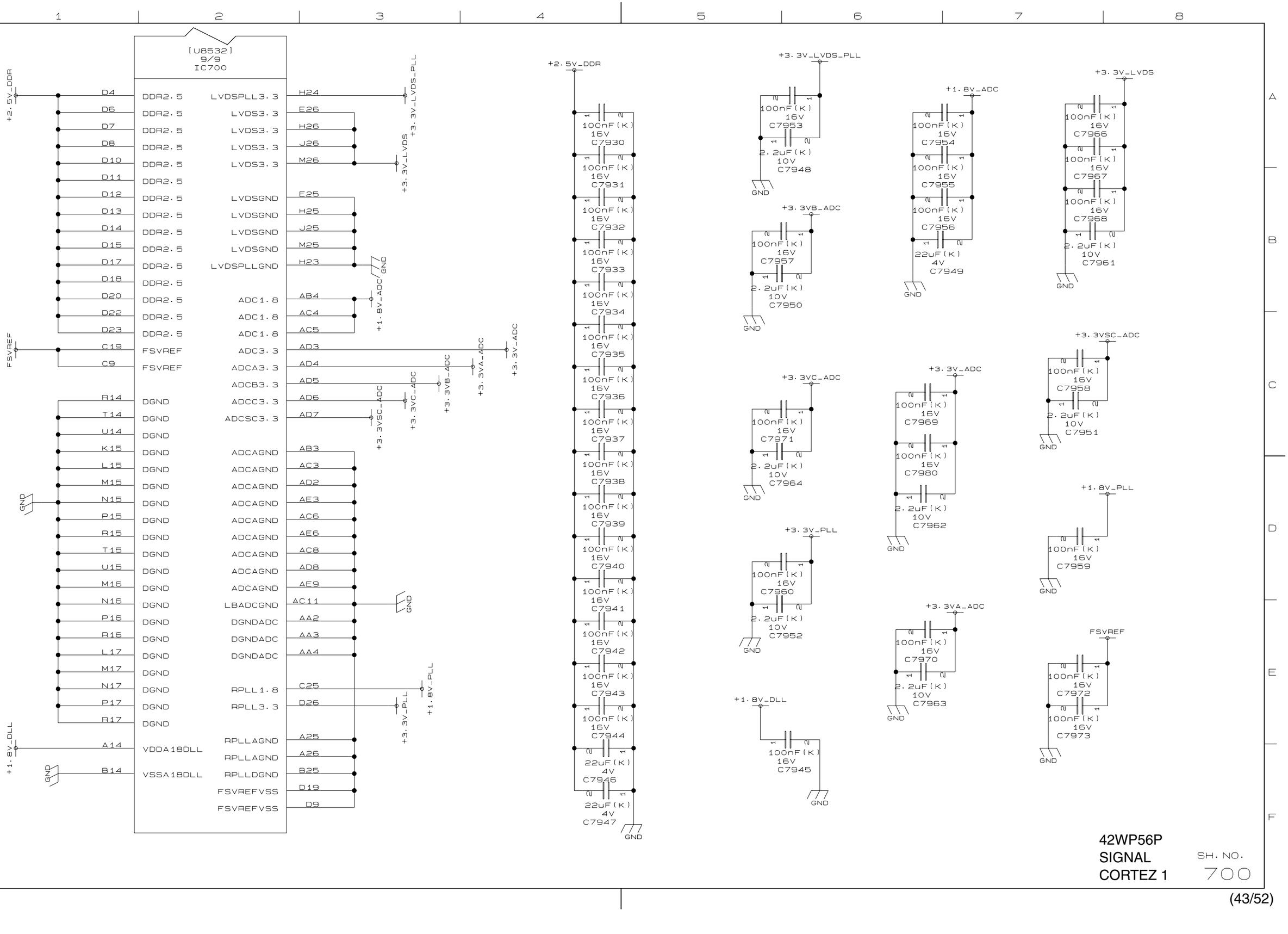

42WP56P
SIGNAL
CORTEZ 1

SH. NO.
700

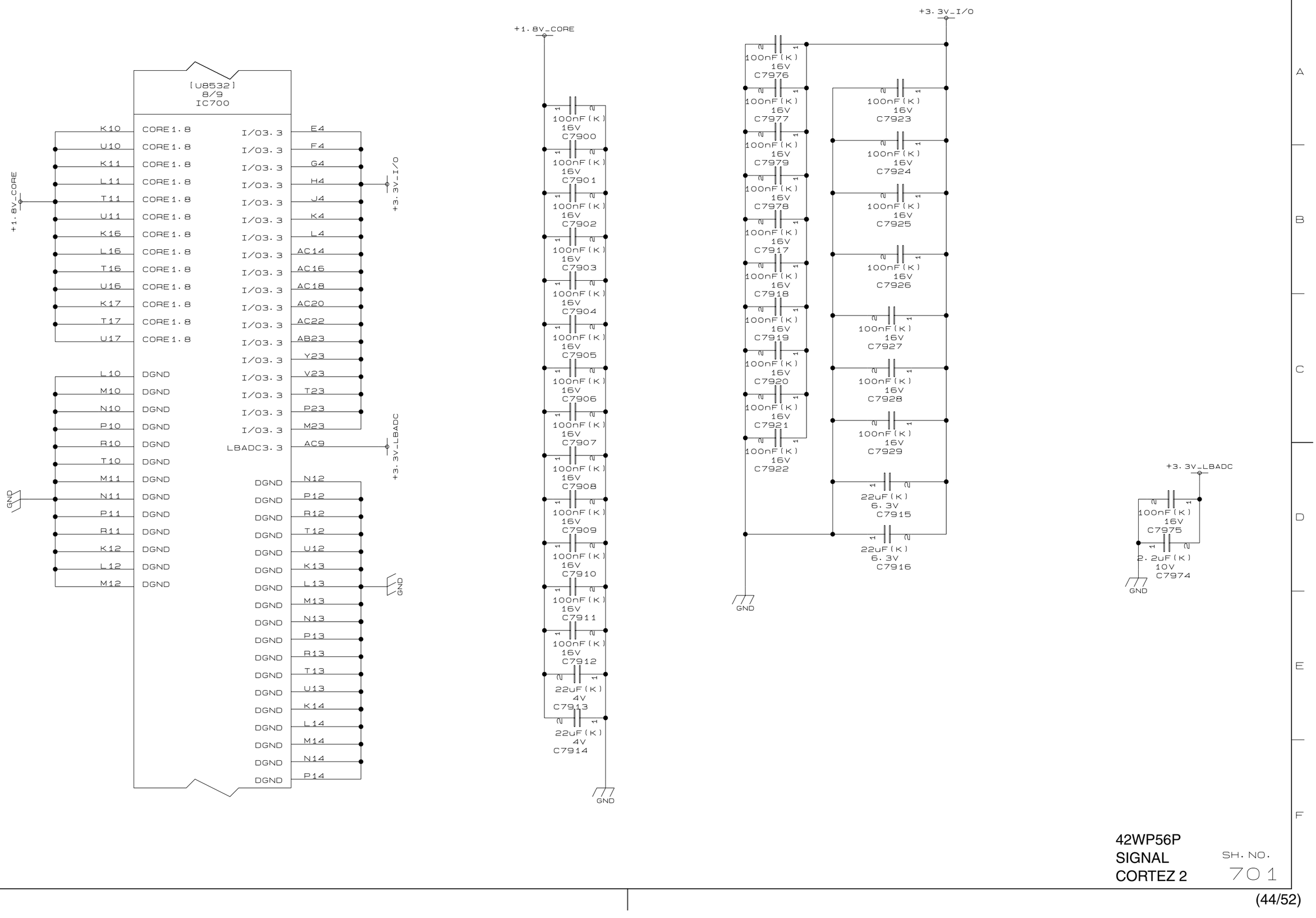

42WP56P
SIGNAL
CORTEZ 2

SH. NO.
701

/FSCAS. /FSCS[0-1]. /FSRAS. /FSWE. FSADDR[0-12]. FSBKSEL[0-1]. FSCKE. FSCLK+. FSCLK-. FSDATA[0-31]. FSDQM[0-3]. FSDQS[0-3]

[U8532]
5/9
IC700

FSDATA[15] FSDATA[14] FSDATA[13] FSDATA[12] — RM700 [RMX4A] 33(J) — B4 A4 B5 A5 — FSDATA0 FSDATA1 FSDATA2 FSDATA3
FSDATA[11] FSDATA[10] FSDATA[9] FSDATA[8] — RM701 [RMX4A] 33(J) — B7 A7 B8 A8 — FSDATA4 FSDATA5 FSDATA6 FSDATA7
FSDATA[7] FSDATA[6] FSDATA[5] FSDATA[4] — RM702 [RMX4A] 33(J) — B9 A9 B10 A10 — FSDATA8 FSDATA9 FSDATA10 FSDATA11
FSDATA[3] FSDATA[2] FSDATA[1] FSDATA[0] — RM703 [RMX4A] 33(J) — B12 A12 B13 A13 — FSDATA12 FSDATA13 FSDATA14 FSDATA15
FSDATA[31] FSDATA[30] FSDATA[29] FSDATA[28] — RM704 [RMX4A] 33(J) — B15 A15 B16 A16 — FSDATA16 FSDATA17 FSDATA18 FSDATA19
FSDATA[27] FSDATA[26] FSDATA[25] FSDATA[24] — RM705 [RMX4A] 33(J) — B18 A18 B19 A19 — FSDATA20 FSDATA21 FSDATA22 FSDATA23
FSDATA[23] FSDATA[22] FSDATA[21] FSDATA[20] — RM706 [RMX4A] 33(J) — B20 A20 B21 A21 — FSDATA24 FSDATA25 FSDATA26 FSDATA27
FSDATA[19] FSDATA[18] FSDATA[17] FSDATA[16] — RM737 [RMX4A] 33(J) — B23 A23 B24 A24 — FSDATA28 FSDATA29 FSDATA30 FSDATA31

FSBKSEL1 FSBKSEL0 FSCKE FSRAS FSCAS FSWE FSDQM3 FSDQM2 FSDQM1 FSDQM0 FSDQS3 FSDQS2 FSDQS1 FSDQS0 FSCS1 FSCS0 FSCLKn FSCLKp FSADDR12 FSADDR11 FSADDR10 FSADDR9 FSADDR8 FSADDR7 FSADDR6 FSADDR5 FSADDR4 FSADDR3 FSADDR2 FSADDR1 FSADDR0

C20 — R736 — FSBKSEL[1]
C21 — R735 — FSBKSEL[0]
C4 — R734 — FSCKE
C24 D24 C23 — RM707 [RMX4A] 33(J) — /FSRAS /FSCAS /FSWE
B22 — R740 — FSDQM[2]
B17 — R739 — FSDQM[3]
A11 — R738 — FSDQM[0]
A6 — R737 — FSDQM[1]
A22 — R744 — FSDQS[2]
A17 — R743 — FSDQS[3]
B11 — R742 — FSDQS[0]
B6 — R741 — FSDQS[1]
C22 — R716 — /FSCS[1]
D21 — R717 — /FSCS[0]
C5 — R718 — FSCLK-
D5 — R719 — FSCLK+
C11 C14 D16 C12 C6 C7 C8 C10 C13 — RM708 [RMX4A] 33(J) — FSADDR[11] FSADDR[4] FSADDR[9] FSADDR[12]
C12 — R707 33(J) — FSADDR[10]
C6 C7 C8 C10 — RM709 [RMX4A] 33(J) — FSADDR[8] FSADDR[7] FSADDR[6] FSADDR[5]
C15 C16 C17 C18 — RM710 [RMX4A] 33(J) — FSADDR[3] FSADDR[2] FSADDR[1] FSADDR[0]

42WP56P
SIGNAL
DDR I/F

SH. NO.
702

/FSCAS. /FSCS[0]. /FSRAS. /FSWE. FSADDR[0-12]. FSBKSEL[0-1]. FSCKE. FSCLK+. FSCLK-. FSDQM[0-1]. FSDQS[0-1]

/FSCAS. /FSCS[0]. /FSRAS. /FSWE. FSADDR[0-12]. FSBKSEL[0-1]. FSCKE. FSCLK+. FSCLK-. FSDATA[0-15]. FSDQM[2-3]. FSDQS[2-3]

FSDATA[16-31]

HY5DU281622ETP-5 [MDSD8M16] IC701

HY5DU281622ETP-5 [MDSD8M16] IC702

FSADDR[0] 29 A0
FSADDR[1] 30 A1
FSADDR[2] 31 A2
FSADDR[3] 32 A3
FSADDR[4] 35 A4
FSADDR[5] 36 A5
FSADDR[6] 37 A6
FSADDR[7] 38 A7
FSADDR[8] 39 A8
FSADDR[9] 40 A9
FSADDR[10] 28 A10/AP
FSADDR[11] 41 A11

FSBKSEL[1] 27 BS1
FSBKSEL[0] 26 BS0
FSCLK- 46 CLK
FSCLK+ 45 CLK
FSCKE 44 CKE

R732 220(J) NOT MOUNT
R733 220(J) NOT MOUNT

/FSCS[0] 24 CS
/FSRAS 23 RAS
/FSCAS 22 CAS
/FSWE 21 WE

R720 33(J) FSDQM[0] 20 LDM
R721 33(J) FSDQM[1] 47 UDM
R722 33(J) FSDQS[0] 16 LDQS
R723 33(J) FSDQS[1] 51 UDQS

R724 33(J) FSDQM[2] 20 LDM
R725 33(J) FSDQM[3] 47 UDM
R726 33(J) FSDQS[2] 16 LDQS
R727 33(J) FSDQS[3] 51 UDQS

14 NC
17 NC
19 NC
25 NC
FSADDR[12] 42 NC
43 NC
50 NC
53 NC

DQ0 DQ1 DQ2 DQ3 DQ4 DQ5 DQ6 DQ7 DQ8 DQ9 DQ10 DQ11 DQ12 DQ13 DQ14 DQ15

[RMX4A] RM711 33(J): FSDATA[0] FSDATA[1] FSDATA[2] FSDATA[3]
[RMX4A] RM712 33(J): FSDATA[4] FSDATA[5] FSDATA[6] FSDATA[7]
[RMX4A] RM713 33(J): FSDATA[8] FSDATA[9] FSDATA[10] FSDATA[11]
[RMX4A] RM714 33(J): FSDATA[12] FSDATA[13] FSDATA[14] FSDATA[15]
[RMX4A] RM715 33(J): FSDATA[16] FSDATA[17] FSDATA[18] FSDATA[19]
[RMX4A] RM716 33(J): FSDATA[20] FSDATA[21] FSDATA[22] FSDATA[23]
[RMX4A] RM717 33(J): FSDATA[24] FSDATA[25] FSDATA[26] FSDATA[27]
[RMX4A] RM718 33(J): FSDATA[28] FSDATA[29] FSDATA[30] FSDATA[31]

+2.5V_DDR
FSVREF

C774 100nF(K)
C775 100nF(K)
C776 100nF(K)
C777 100nF(K)
C778 100nF(K)
C779 100nF(K)
C780 100nF(K)

C781 100nF(K)
C782 100nF(K)
C783 100nF(K)
C784 100nF(K)
C785 100nF(K)
C786 100nF(K)
C787 100nF(K)

[VDDQ] [VSSQ] 3 9 15 55 61 6 12 52 58 64
[VDD] [VSS] 1 18 33 66 34 48
[VREF] 49

GND

42WP56P
SIGNAL
DDR SDRAM

SH. NO. 703

/FSCAS. /FSCS[0-1]. /FSRAS. /FSWE. FSADDR[0-12]. FSBKSEL[0-1]. FSCKE. FSCLK+. FSCLK-. FSDATA[0-31]. FSDQM[0-3]. FSDQS[0-3]

[RMX4A] RM719 — FSDATA[31] FSDATA[30] FSDATA[29] FSDATA[28]
RM720 [RMX4A] — FSDATA[27] FSDATA[26] FSDATA[25] FSDATA[24]
[RMX4A] RM721 — FSDATA[23] FSDATA[22] FSDATA[21] FSDATA[20]
RM723 [RMX4A] — FSDATA[19] FSDATA[18] FSDATA[17] FSDATA[16]
RM725 [RMX4A] — FSDATA[15] FSDATA[14] FSDATA[13] FSDATA[12]
[RMX4A] RM727 — FSDATA[11] FSDATA[10] FSDATA[9] FSDATA[8]
RM729 [RMX4A] — FSDATA[7] FSDATA[6] FSDATA[5] FSDATA[4]
RM730 [RMX4A] — FSDATA[3] FSDATA[2] FSDATA[1] FSDATA[0]
R731 150(J) — FSADDR[10]
RM731 [RMX4A] — FSADDR[11] FSADDR[4] FSADDR[9] FSADDR[12]
RM732 [RMX4A] — FSADDR[5] FSADDR[6] FSADDR[7] FSADDR[8]
RM733 [RMX4A] — FSADDR[0] FSADDR[1] FSADDR[2] FSADDR[3]
150(J)

C791 100nF(K)
C792 100nF(K)
C793 100nF(K)
C795 100nF(K)
C797 100nF(K)
C799 100nF(K)
C7001 100nF(K)
C7003 100nF(K)
C7004 100nF(K)
C7005 100nF(K)
C7006 100nF(K)
GND

+2.5V_DDR
R9220 10K(F) MOUNT
FSVREF
REG. [L2995] IC703 LP2995MX
VDDQ
VREF
VSENSE
NC
VTT
[AVIN]
[PVIN]
[GND]
W9116
C773 22uF(K) 4V MOUNT
C788 1uF(K) 10V
C789 220uF(M) [CP] 16V
C790 10nF(K)
R9221 10K(F) MOUNT
GND

/FSBAS /FSCAS /FSWE
/FSCS[1] /FSCS[0] FSBKSEL[0] FSBKSEL[1]
FSDQS[1] FSDQM[1] FSDQM[0] FSDQS[0]
FSDQS[3] FSDQM[3] FSDQM[2] FSDQS[2]
FSCLK- FSCLK+ FSCKE
RM722 [RMX4A] 150(J)
RM724 [RMX4A] 150(J)
[RMX4A] RM726 150(J)
[RMX4A] RM728 150(J)
R728 150(J)
R729 150(J)
R730 150(J)

C794 100nF(K)
C796 100nF(K)
C798 100nF(K)
C7000 100nF(K)
C7002 100nF(K)
GND

42WP56P
SIGNAL
DDR TERMINATION

SH. NO.
704

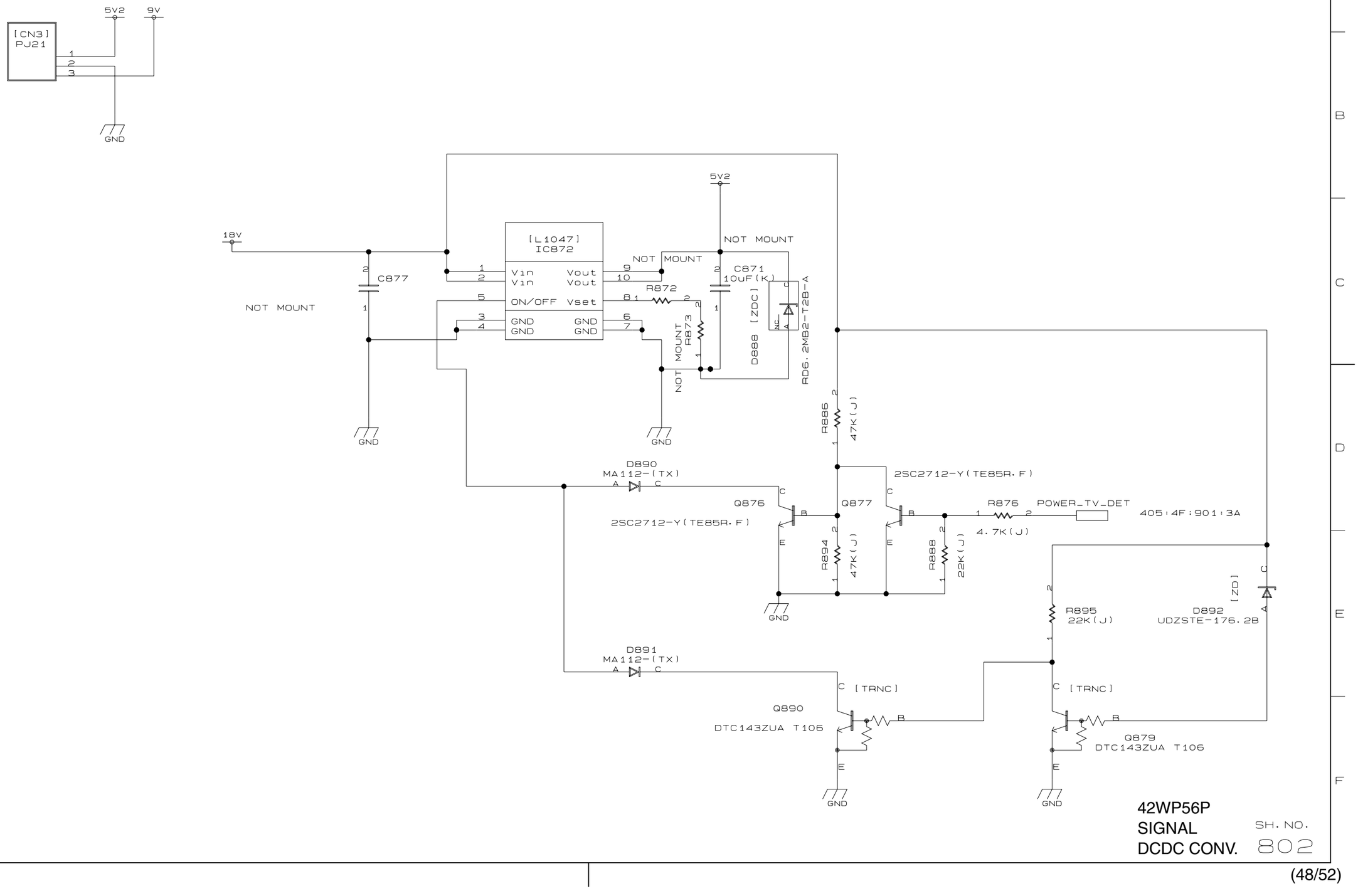
[CN3]
PJ21
1
2
3
5V2
9V
GND
18V
C877
NOT MOUNT
[L1047]
IC872
Vin
Vin
ON/OFF
GND
GND
Vout
Vout
Vset
NOT MOUNT
C871
10uF(K)
R872
R873
MOUNT
D888 [ZDC]
RD6.2MB2-T2B-A
R886
47K(J)
D890
MA112-(TX)
D891
MA112-(TX)
Q876
2SC2712-Y(TE85R.F)
Q877
2SC2712-Y(TE85R.F)
R894
47K(J)
R888
22K(J)
R876
4.7K(J)
POWER_TV_DET
405:4F:901:3A
R895
22K(J)
D892
UDZSTE-176.2B
[ZD]
[TRNC]
Q890
DTC143ZUA T106
Q879
DTC143ZUA T106
42WP56P
SIGNAL
DCDC CONV.
SH. NO.
802

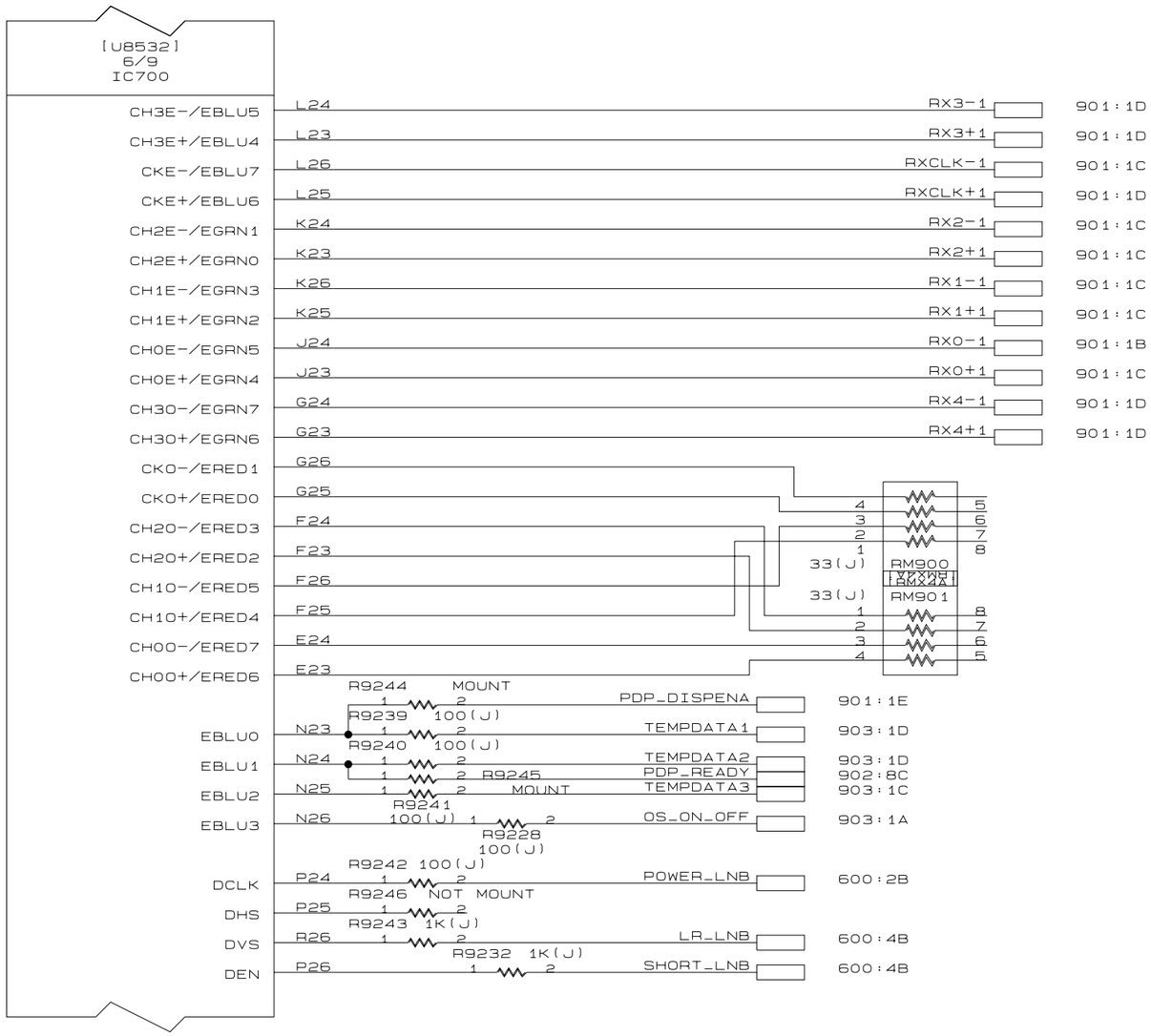

42WP56P
SIGNAL
LVDS OUT

SH. NO.
900

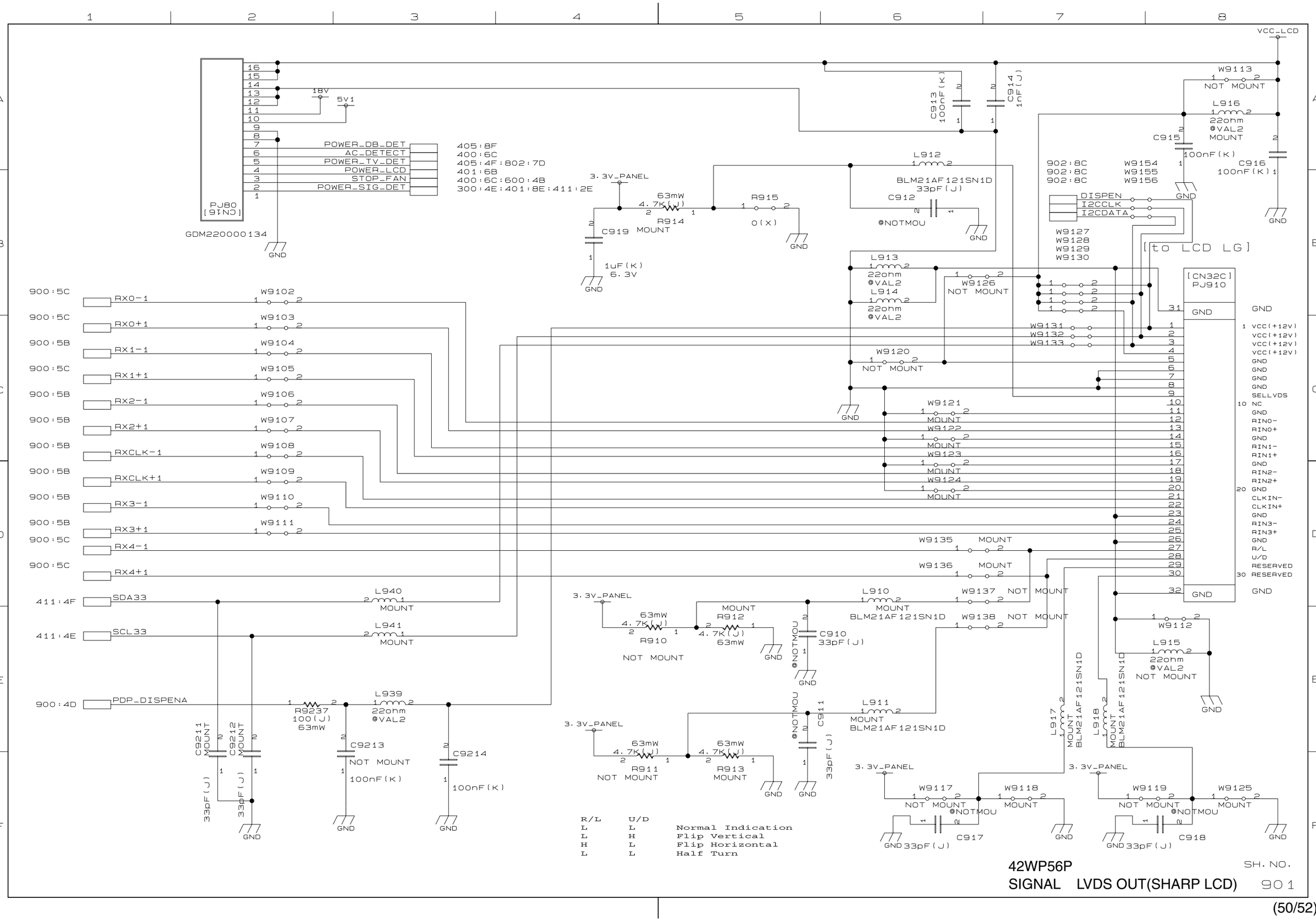
PJ80 [CN16]
GDM220000134
POWER_DB_DET
AC_DETECT
POWER_TV_DET
POWER_LCD
STOP_FAN
POWER_SIG_DET
18V
5V1
405:8F
400:6C
405:4F:802:7D
401:6B
400:6C:600:4B
300:4E:401:8E:411:2E
3.3V_PANEL
63mW
4.7K(J)
R914
MOUNT
R915
0(X)
C919
1uF(K)
6.3V
C913 100nF(K)
C914 1nF(J)
L912
BLM21AF121SN1D
33pF(J)
C912
@NOTMOU
VCC_LCD
W9113
NOT MOUNT
L916
22ohm
@VAL2
MOUNT
C915
100nF(K)
C916
100nF(K)
902:8C
902:8C
902:8C
W9154
W9155
W9156
DISPEN
I2CCLK
I2CDATA
W9127
W9128
W9129
W9130
[to LCD LG]
L913
22ohm
@VAL2
L914
22ohm
@VAL2
W9126
NOT MOUNT
[CN32C]
PJ910
W9131
W9132
W9133
W9120
NOT MOUNT
W9121
MOUNT
W9122
MOUNT
W9123
MOUNT
W9124
MOUNT
W9135 MOUNT
W9136 MOUNT
W9137 NOT MOUNT
W9138 NOT MOUNT
W9112
L915
22ohm
@VAL2
NOT MOUNT
L917
MOUNT
BLM21AF121SN1D
L918
MOUNT
BLM21AF121SN1D
900:5C RX0-1
900:5C RX0+1
900:5B RX1-1
900:5C RX1+1
900:5B RX2-1
900:5B RX2+1
900:5B RXCLK-1
900:5B RXCLK+1
900:5B RX3-1
900:5B RX3+1
900:5C RX4-1
900:5C RX4+1
W9102
W9103
W9104
W9105
W9106
W9107
W9108
W9109
W9110
W9111
411:4F SDA33
411:4E SCL33
L940
L941
MOUNT
900:4D PDP_DISPENA
R9237
100(J)
63mW
L939
22ohm
@VAL2
C9211
C9212
MOUNT
33pF(J)
C9213
NOT MOUNT
100nF(K)
C9214
100nF(K)
3.3V_PANEL
R910
NOT MOUNT
R912
MOUNT
4.7K(J)
63mW
C910
33pF(J)
@NOTMOU
L910
MOUNT
BLM21AF121SN1D
3.3V_PANEL
R911
NOT MOUNT
R913
MOUNT
4.7K(J)
63mW
C911
33pF(J)
@NOTMOU
L911
MOUNT
BLM21AF121SN1D
3.3V_PANEL
W9117
NOT MOUNT
W9118
MOUNT
@NOTMOU
C917
33pF(J)
3.3V_PANEL
W9119
NOT MOUNT
W9125
MOUNT
@NOTMOU
C918
33pF(J)
GND
R/L U/D
L L Normal Indication
L H Flip Vertical
H L Flip Horizontal
L L Half Turn
1 GND
2 VCC(+12V)
3 VCC(+12V)
4 VCC(+12V)
5 VCC(+12V)
6 GND
7 GND
8 GND
9 GND
10 SELLVDS
11 NC
12 GND
13 RIN0-
14 RIN0+
15 GND
16 RIN1-
17 RIN1+
18 GND
19 RIN2-
20 RIN2+
21 GND
22 CLKIN-
23 CLKIN+
24 GND
25 RIN3-
26 RIN3+
27 GND
28 R/L
29 U/D
30 RESERVED
31 RESERVED
32 GND
GND
42WP56P
SIGNAL LVDS OUT(SHARP LCD)
SH. NO.
901

(50/52)

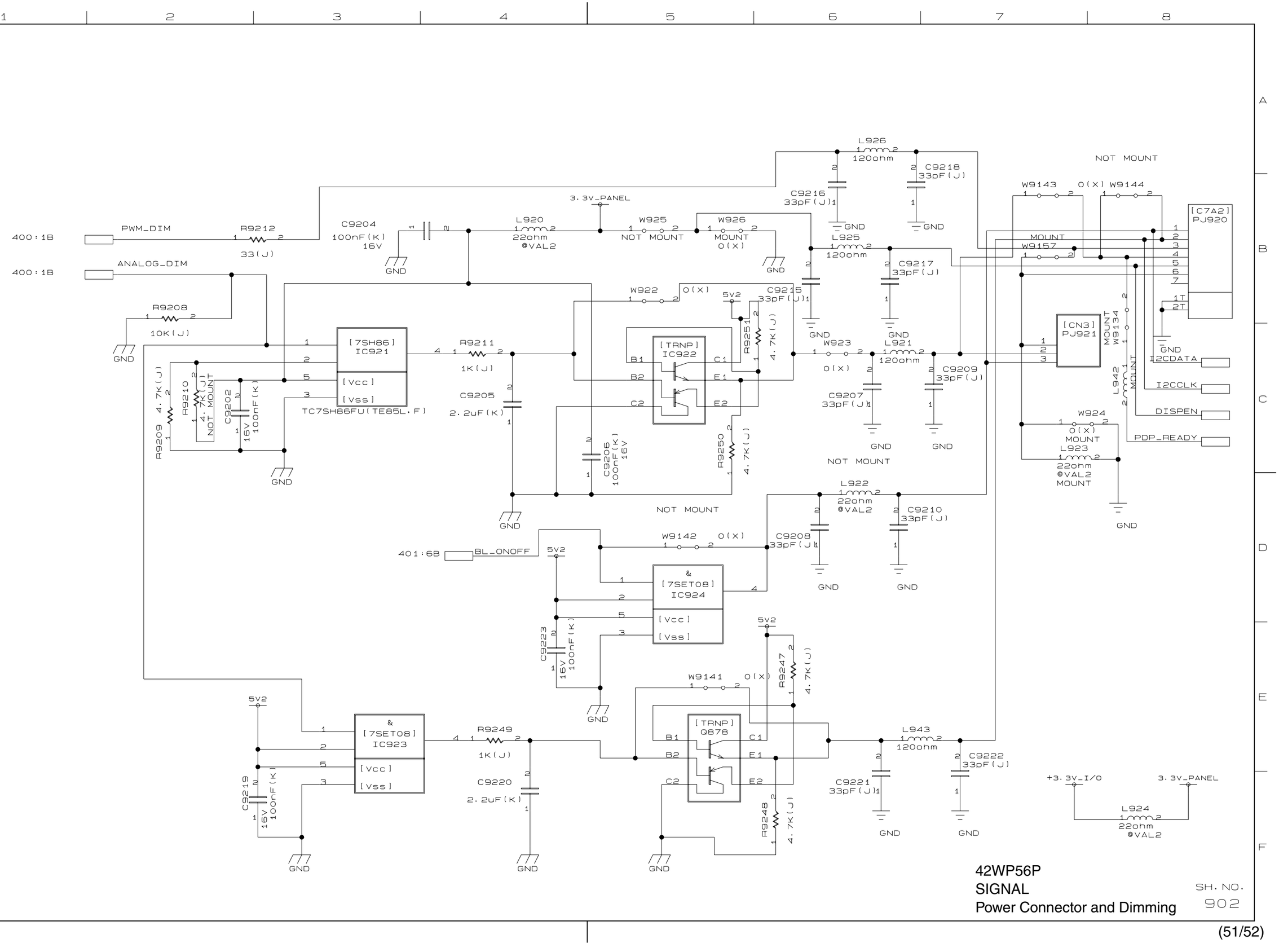

42WP56P
SIGNAL
Power Connector and Dimming

SH. NO.
902

Over shoot control for SHARP

NOT MOUNT R932 10K(J) GND
NOT MOUNT R933 4.7K(J) 3.3V_PANEL
NOT MOUNT R936 10K(J) GND
NOT MOUNT R938 4.7K(J) 3.3V_PANEL

50HZ_60HZ 401:6E W933
OS_ON_OFF 900:4E W934

3.3V_PANEL
NOT MOUNT R930 4.7K(J)
R931 10K(J) GND

TEMPDATA3 900:4D W930
TEMPDATA2 900:4D W931
TEMPDATA1 900:4D W932

NOT MOUNT R934 4.7K(J) 3.3V_PANEL
NOT MOUNT R935 4.7K(J) 3.3V_PANEL
NOT MOUNT R937 4.7K(J) 3.3V_PANEL

C920 1uF(K) 6.3V GND

L930 BLM21AF121SN1D
L931 BLM21AF121SN1D
L932 BLM21AF121SN1D
L933 BLM21AF121SN1D
L934 BLM21AF121SN1D
L935 BLM21AF121SN1D

C930 33pF(J)
C931 33pF(J)
C932 33pF(J)
C933 33pF(J)
C934 33pF(J)
C935 33pF(J) GND

C936 33pF(J)
C937 33pF(J)
C938 33pF(J)
C939 33pF(J)
C940 33pF(J)
C941 33pF(J) GND

W935 NOT MOUNT
L936 220ohm @VAL2 GND

G36220330054
[CN7] PJ930
BM07B-SRSS-TB

3.3V_PANEL
C942 33pF(J) GND
R939 47(J)
R940 10K(F)
L937 120ohm
C943 33pF(J) GND
L938 220ohm @VAL2
C944 33pF(J) GND
C945 33pF(J) GND
R948 [THM] NSM3103F344F3R 150mW

400:1C TEMP1 W937

42WP56P
SIGNAL
LVDS Power and Others

SH. NO. 903

SPECIFICATIONS

Broadcast systems/channels

PAL-I	UHF	UK21-UK69
PAL-B/G	UHF	E21-E69
	VHF	E2-E12, S1-S41
SECAM-L	UHF	F21-F69
	VHF	F1-F10, B-Q
SECAM-D/K	UHF	R21-R69
	VHF	R1-R12

Video Input PAL, SECAM, NTSC 3.58/4.43

External connections

EXT1	Input	21-pin SCART	RGB, A/V
EXT2	Input/Output	21-pin SCART	A/V, S-video Selectable output
EXT3	Input (Side)	4 pin	S-video
		Phono jack	Video
		Phono jacks	Audio L + R
PC	Input	Mini D-sub 15-pin	Analog RGB signal
	Input	3.5mm stereo jack	Audio

Programme Positions	100
Stereo	Nicam 2 carrier system
Visible Screen Size (approx.)	105cm
Display	16:9
Sound output (at 10% distortion)	Main 10W + 10W
Power consumption as specified in EN60107-1 : 1997	315W
Standby (approx.)	<1W
Dimension (approx.)	78cm (H) 110cm (W) 39cm (D) *(Height dimension includes foot stand)*
Weight (approx.)	47kg
Headphone socket	3.5mm stereo
Accessories	Remote control 2 batteries (AAA, IEC R03 1.5V)

TOSHIBA CORPORATION
1-1, SHIBAURA 1-CHOME, MINATO-KU, TOKYO 105-8001, JAPAN