231-103-H7
Jam Nut Mount Hermetic Bulkhead Feed-Thru
MIL-DTL-38999 Series I Type

Connector Series
231 - D38999 Series I Type

Shell Style
H7 - Jam Nut Mount

Shell Size
09
11
13
15
17
19
21
23
25

Insert Arrangement
Per MIL-DTL-38999 Series I
MIL-STD-1560

Alternate Key Position
A, B, C, D
(*N* = Normal)

231 - 103 - H7 Z1 11 - 35 P N - 01

Connector Type
103 - Hermetic Bulkhead Feed-Thru

Contact Termination
P - Pin on Jam Nut Side
S - Socket on Jam Nut Side

Connector Material and Finish
FT - Carbon Steel, Fused Tin
Z1 - CRES, Passivated
ZL - CRES, Nickel Finish

Panel Accomodation
01 - .0625" (Min) .125" (Max)
02 - .0625" (Min) .250" (Max)
03 - .0625" (Min) .500" (Max)

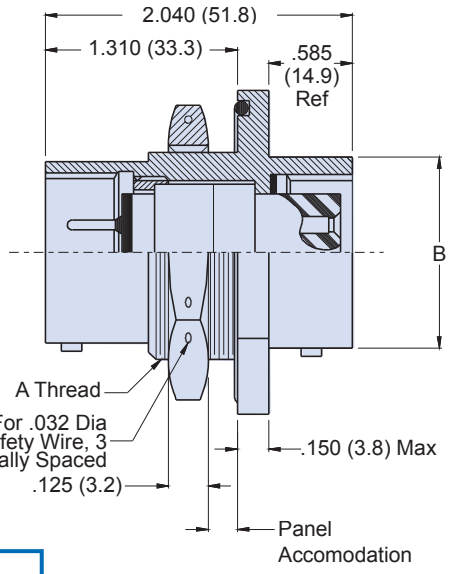

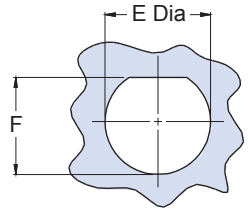

Recommended Panel Cut-Out

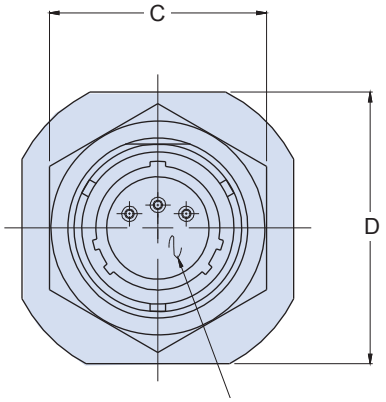

Insert Arrangement per
MIL-DTL-38999, Series I
MIL-STD-1560

TABLE I: CONNECTOR DIMENSIONS

SHELL SIZE	A THREAD CLASS 2A	B DIA MAX	C HEX	D FLATS	E DIA ±.005(0.1)	F +.000-.005 (0-0.1)
09	.688-24 UNEF	.573(14.6)	.875(22.2)	1.062(27.0)	.703(17.9)	.669(17.0)
11	0.812-20 UNEF	.701(17.8)	1.000(25.4)	1.250(31.8)	.827(21.0)	.769(19.5)
13	1.000-20 UNEF	.851(21.6)	1.188(30.2)	1.375(34.9)	1.015(25.8)	.955(24.3)
15	1.125-18 UNEF	.976(24.8)	1.312(33.3)	1.500(38.1)	1.140(29.0)	1.084(27.5)
17	1.250-18 UNEF	1.101(28.0)	1.438(36.5)	1.625(41.3)	1.265(32.1)	1.208(30.7)
19	1.375-18 UNEF	1.208(30.7)	1.562(39.7)	1.812(46.0)	1.390(35.3)	1.333(33.9)
21	1.500-18 UNEF	1.333(33.9)	1.688(42.9)	1.938(49.2)	1.515(38.5)	1.459(37.1)
23	1.625-18 UNEF	1.458(37.0)	1.812(46.0)	2.062(52.4)	1.640(41.7)	1.580(40.1)
25	1.750-18 UNS	1.583(40.2)	2.000(50.8)	2.188(55.6)	1.765(44.8)	1.709(43.4)

APPLICATION NOTES

1. Power to a given contact on one end will result in power to contact directly opposite, regardless of identification letter.
2. Hermeticity = less than 1 x 10^{-4} cc/sec at one atmosphere. Not for use in liquid atmosphere.
3. Material/finish:
   Shell, nut – CRES/passivated, carbon steel/fused tin or CRES/nickel per QQ-N-290.
   Contacts – Gold Plated. Pin: alloy 52; Skt.: copper alloy
   Insulator – fused vitreous glass/N.A.
   Seals – fluorosilicone rubber/N.A.
4. Metric dimensions (mm) are indicated in parentheses.

© 2010 Glenair, Inc.
CAGE CODE 06324
Printed in U.S.A.

GLENAIR, INC. • 1211 AIR WAY • GLENDALE, CA 91201-2497 • 818-247-6000 • FAX 818-500-9912
www.glenair.com
E-Mail: sales@glenair.com