Upper part of housing - BC 161,6 OT U11 KMGY - 2278513

Please be informed that the data shown in this PDF Document is generated from our Online Catalog. Please find the complete data in the user's documentation. Our General Terms of Use for Downloads are valid (http://phoenixcontact.com/download)



DIN rail housing for use in distribution boards in accordance with DIN 43880, Upper housing part with vents, Installation depth connection technology: 11.1 mm, width: 161.6 mm, height: 89.7 mm, depth: 54.85 mm, color: light gray (7035)

Your advantages

- Item is from the BC product range
- Conforms to DIN EN 43880
- Tool-free mounting
- Available in overall widths from one to nine width units (17.8 mm ... 161.6 mm)
- Inflammability class V0 according to UL 94
- Variety of connection technologies
- Can be mounted on the DIN rail or the wall
- Optional with bus connector for DIN rail mounting

RoHS IP20

Key Commercial Data

Packing unit	10 pc
GTIN	4 046356 299480
GTIN	4046356299480

Technical data

Item properties

Brief article description	Upper part of housing
Type	BC 161,6 OT U11 KMGY
Order No.	2278513
Housing type	DIN rail housing for use in distribution boards in accordance with DIN 43880
Housing series	BC
Type	Upper housing part with vents
Max. IP code to attain	IP20
Mounting type	Snap in

Upper part of housing - BC 161,6 OT U11 KMGY - 2278513

Technical data

Item properties

Connection levels	1 (Both sides)
Ventilation openings present	yes
Max. number of positions	96 (pitch: 2.5 mm)
	72 (pitch: 3.5 mm)
	54 (pitch: 5 mm)
	36 (pitch: 7.5 mm)

Dimensions

Width [w]	161.6 mm
Height [h]	89.7 mm
Depth [d]	54.85 mm

Material data

Housing material	Polycarbonate
Color (RAL)	light gray (7035)
Flammability rating according to UL 94	V0

Ambient conditions

Ambient temperature (storage/transport)	-40 °C ... 70 °C
Ambient temperature (assembly)	-5 °C ... 100 °C
Ambient temperature (operation)	-40 °C ... 100 °C (depending on power dissipation)
Relative humidity (storage/transport)	95 %

PCB data

Number of PCB holders	18
PCB thickness	1.8 mm
Mounting position	parallel to the DIN rail
Type of PCB mount	Latching

Mechanical strength/tumbling barrel

Specification	IEC 60068-2-31:2008-05
Height of fall	50 cm
Number of drop cycles	50

Vibration test

Specification	IEC 60068-2-6:2007-12
Frequency	10 - 150 - 10 Hz
Sweep speed	1 octave/min
Amplitude	0.15 mm (10 - 58.1 Hz)
Acceleration	2g (58.1 - 150 Hz)
Test duration per axis	2.5 h
Test directions	X-, Y- and Z-axis

Shock

Specification	IEC 60068-2-27:2008-02

Upper part of housing - BC 161,6 OT U11 KMGY - 2278513

Technical data

Shock

Pulse shape	Half-sine
Acceleration	15g
Shock duration	11 ms
Number of shocks per direction	3
Test directions	X-, Y- and Z-axis (pos. and neg.)

Test for assessing the risk of fire (glow wire)

Specification	DIN EN 60695-2-11 (VDE 0471-2-11):2014-11
Temperature	850 °C
Time of exposure	30 s

Degrees of protection provided by housings (IP code)

Specification	IEC 60529:1989-11 + AMD 1:1999-11 + AMD 2:2013-08
Result, degree of protection, IP code	IP20

General information

Type of note	Assembly instruction:
Note	Refer to the data sheet for the range in the download area.

Packaging information

Type of packaging	packed in cardboard
Pieces per package	10
Denomination packing units	Pcs.
Outer packaging type	Carton

Standards and regulations

Flammability rating according to UL 94	V0

Environmental Product Compliance

China RoHS	Environmentally friendly use period: unlimited = EFUP-e
	No hazardous substances above threshold values

Drawings

Upper part of housing - BC 161,6 OT U11 KMGY - 2278513

Dimensional drawing

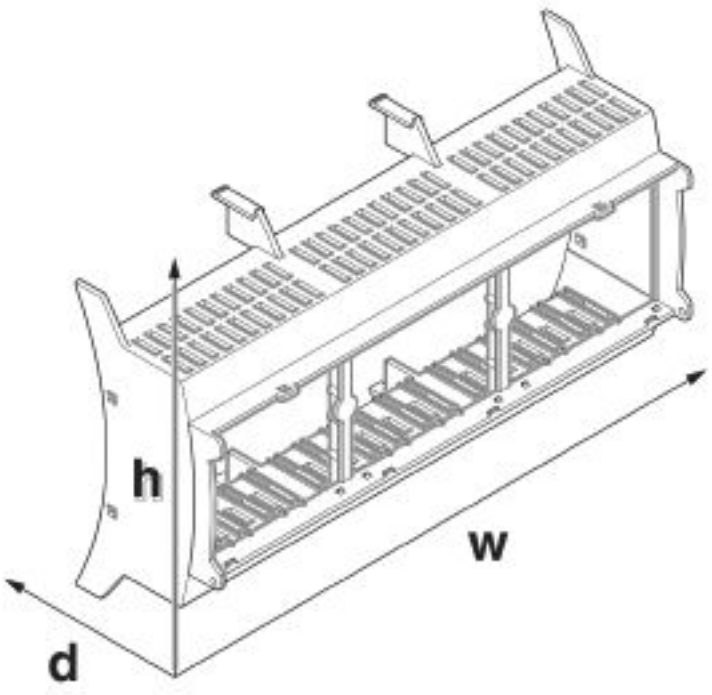

Classifications

eCl@ss

eCl@ss 10.0.1	27182702
eCl@ss 4.0	27180400
eCl@ss 4.1	27180400
eCl@ss 5.0	27180500
eCl@ss 5.1	27180500
eCl@ss 6.0	27180800
eCl@ss 7.0	27182702
eCl@ss 8.0	27182702
eCl@ss 9.0	27182702

ETIM

ETIM 2.0	EC001031
ETIM 3.0	EC001031
ETIM 4.0	EC001031
ETIM 5.0	EC001031
ETIM 6.0	EC001031
ETIM 7.0	EC001031

UNSPSC

UNSPSC 6.01	31261501

Upper part of housing - BC 161,6 OT U11 KMGY - 2278513

Classifications

UNSPSC

UNSPSC 7.0901	31261501
UNSPSC 11	31261501
UNSPSC 12.01	31261501
UNSPSC 13.2	31261501
UNSPSC 18.0	31261501
UNSPSC 19.0	31261501
UNSPSC 20.0	31261501
UNSPSC 21.0	31261501

Approvals

Approvals

Approvals

EAC

Ex Approvals

Approval details

EAC	EAC	B.01687

Accessories

Accessories

Fiber optic

Fiber optic - HS LC-V-D3/ R2XC1-5,08 - 2202311



Light guides, passive, rigid, can be used for the BC housing range (housing must be processed)

Upper part of housing - BC 161,6 OT U11 KMGY - 2278513

Accessories

Fiber optic - HS LC-V-D3/ R3XC1-5,08 - 2202312



Light guides, passive, rigid, can be used for the BC housing range (housing must be processed)

Necessary add-on products

PCB terminal block - MKDSN 1,5/ 2 HT BK - 1985849



PCB terminal block, nominal current: 13.5 A, rated voltage (III/2): 320 V, nominal cross section: 1.5 mm², pitch: 5 mm, number of positions: 2, connection method: Screw connection with tension sleeve, mounting: THR soldering, conductor/PCB connection direction: 0 °, color: black, Pin layout: Linear pinning, Solder pin [P]: 3.5 mm. This article can be soldered in the reflow furnace together with SMD components.

PCB terminal block - MKDSN 2,5/ 3 HT BK - 1985933



PCB terminal block, nominal current: 16 A, rated voltage (III/2): 320 V, nominal cross section: 2.5 mm², pitch: 5 mm, number of positions: 3, connection method: Screw connection with tension sleeve, mounting: THR soldering, conductor/PCB connection direction: 0 °, color: black, Pin layout: Linear pinning, Solder pin [P]: 3.5 mm. This article can be soldered in the reflow furnace together with SMD components.

PCB terminal block - MKDS 1,5/ 3 - 1715035



PCB terminal block, nominal current: 17.5 A, rated voltage (III/2): 400 V, nominal cross section: 1.5 mm², pitch: 5 mm, number of positions: 3, connection method: Screw connection with tension sleeve, mounting: Wave soldering, conductor/PCB connection direction: 0 °, color: green, Pin layout: Linear pinning, Solder pin [P]: 3.5 mm. The article can be aligned to create different nos. of positions!

PCB terminal block - MKDSN 2,5/ 3 - 1890976



PCB terminal block, nominal current: 24 A, rated voltage (III/2): 400 V, nominal cross section: 2.5 mm², pitch: 5 mm, number of positions: 3, connection method: Screw connection with tension sleeve, mounting: Wave soldering, conductor/PCB connection direction: 0 °, color: green, Pin layout: Linear pinning, Solder pin [P]: 3.5 mm. The article can be aligned to create different nos. of positions!

Upper part of housing - BC 161,6 OT U11 KMGY - 2278513

Accessories

PCB terminal block - MKKDSH 3/ 3 - 1721346



PCB terminal block, nominal current: 24 A, rated voltage (III/2): 400 V, nominal cross section: 2.5 mm², pitch: 5 mm, number of positions: 3, connection method: Screw connection with tension sleeve, mounting: Wave soldering, conductor/PCB connection direction: 0 °, color: green, Pin layout: Linear pinning, Solder pin [P]: 5 mm. The article can be aligned to create different nos. of positions!

PCB terminal block - GMKDS 1,5/ 2 - 1717020



PCB terminal block, nominal current: 17.5 A, rated voltage (III/2): 630 V, nominal cross section: 1.5 mm², pitch: 7.5 mm, number of positions: 2, connection method: Screw connection with tension sleeve, mounting: Wave soldering, conductor/PCB connection direction: 0 °, color: green, Pin layout: Linear pinning, Solder pin [P]: 3.5 mm. The article can be aligned to create different nos. of positions!

PCB terminal block base - GMKDSP 3/ 2 - 1732021



PCB terminal block, nominal current: 24 A, rated voltage (III/2): 630 V, nominal cross section: 2.5 mm², pitch: 7.5 mm, number of positions: 2, connection method: Screw connection with tension sleeve, mounting: Wave soldering, conductor/PCB connection direction: 0 °, color: green, Pin layout: Linear pinning, Solder pin [P]: 5 mm. The article can be aligned to create different nos. of positions!

PCB terminal block - SPTA 1/ 8-3,5 - 1752162



PCB terminal block, nominal current: 9 A, rated voltage (III/2): 200 V, nominal cross section: 1 mm², pitch: 3.5 mm, number of positions: 8, connection method: Push-in spring connection, mounting: Wave soldering, conductor/PCB connection direction: 65 °, color: green, Pin layout: Linear pinning, Solder pin [P]: 3.5 mm

---

PCB terminal block - SPTA 1/ 6-5,0 - 1752256



PCB terminal block, nominal current: 9 A, rated voltage (III/2): 320 V, nominal cross section: 1 mm², pitch: 5 mm, number of positions: 6, connection method: Push-in spring connection, mounting: Wave soldering, conductor/PCB connection direction: 65 °, color: green, Pin layout: Linear pinning, Solder pin [P]: 3.5 mm

---

Upper part of housing - BC 161,6 OT U11 KMGY - 2278513

Accessories

PCB terminal block - FK-MPT 0,5/ 8-3,5-H - 1928822



PCB terminal block, nominal current: 4 A, rated voltage (III/2): 250 V, nominal cross section: 0.5 mm², pitch: 3.5 mm, number of positions: 8, connection method: Push-in spring connection, mounting: Wave soldering, conductor/PCB connection direction: 0 °, color: green, Pin layout: Linear pinning, Solder pin [P]: 4 mm

---

PCB terminal block - FK-MPT 0,5/ 8-ST-3,5 - 1913989



PCB connector, nominal current: 4 A, rated voltage (III/2): 250 V, nominal cross section: 0.5 mm², number of positions: 8, pitch: 3.5 mm, connection method: Push-in spring connection, color: green, contact surface: Tin

---

PCB terminal block - PTSA 0,5/11-2,5-Z - 1990096



PCB terminal block, nominal current: 2 A, rated voltage (III/2): 250 V, nominal cross section: 0.5 mm², pitch: 2.5 mm, number of positions: 11, connection method: Push-in spring connection, mounting: Wave soldering, conductor/PCB connection direction: 45 °, color: green, Pin layout: Zigzag pinning M, Solder pin [P]: 3.6 mm. Offset soldering legs, two-rowed

---

PCB terminal block - PTSA 0,5/11-2,5-F - 1989832



PCB terminal block, nominal current: 2 A, rated voltage (III/2): 250 V, nominal cross section: 0.5 mm², pitch: 2.5 mm, number of positions: 11, connection method: Push-in spring connection, mounting: Wave soldering, conductor/PCB connection direction: 45 °, color: green, Pin layout: Linear pinning, Solder pin [P]: 3.6 mm. Soldering legs in front area, one-rowed

---

PCB terminal block - PTS 1,5/ 6-5,0-H - 1792902



PCB terminal block, nominal current: 16 A, rated voltage (III/2): 400 V, nominal cross section: 1.5 mm², pitch: 5 mm, number of positions: 6, connection method: Push-in spring connection, mounting: Wave soldering, conductor/PCB connection direction: 0 °, color: green, Pin layout: Linear pinning, Solder pin [P]: 2.5 mm

---

Upper part of housing - BC 161,6 OT U11 KMGY - 2278513

Accessories

PCB terminal block - PT 1,5/ 6-5,0-H - 1935200



PCB terminal block, nominal current: 17.5 A, rated voltage (III/2): 400 V, nominal cross section: 1.5 mm², pitch: 5 mm, number of positions: 6, connection method: Screw connection with wire protector, mounting: Wave soldering, conductor/PCB connection direction: 0 °, color: green, Pin layout: Linear pinning, Solder pin [P]: 3.5 mm

PCB terminal block - PT 1,5/ 6-PH-5,0 - 1755622



PCB connector, nominal current: 10 A, rated voltage (III/2): 400 V, nominal cross section: 1.5 mm², number of positions: 6, pitch: 5 mm, connection method: Screw connection with tension sleeve, color: green, contact surface: Tin

Pin strip - PST 1,3/ 6-5,0 - 1933228



Pin strip, nominal current: 12 A, rated voltage (III/2): 320 V, nominal cross section: 1.5 mm², number of positions: 6, pitch: 5 mm, color: black, contact surface: Tin, mounting: THR soldering, pin layout: Linear pinning, solder pin [P]: 3.5 mm, The maximum current depends on the plug used. The lower of the two current values apply for plug and pin strip. The pin strip is made of highly temperature resistant plastic and is thus suitable for the reflow process.

Housing cover - BC 161,6 DKL S TRANS - 2278542



DIN rail housing for use in distribution boards in accordance with DIN 43880, transparent hinged cover, can be sealed, Including insertion plate, width: 161.6 mm, height: 45 mm, depth: 8 mm, color: transparent/light gray (7035)

Housing cover - BC 161,6 DKL R KMGY - 2278539



DIN rail housing for use in distribution boards in accordance with DIN 43880, Latching cover (non-detachable), width: 161.6 mm, height: 45 mm, depth: 8 mm, color: light gray (7035)

Additional products

Upper part of housing - BC 161,6 OT U11 KMGY - 2278513

Accessories

Filler plugs - BC 53,6 BS U11 KMGY - 2896225



DIN rail housing for use in distribution boards in accordance with DIN 43880, Filler plug for unoccupied terminal points, width: 53.6 mm, depth: 11.05 mm, color: light gray (7035)

Phoenix Contact 2020 © - all rights reserved
http://www.phoenixcontact.com

PHOENIX CONTACT GmbH & Co. KG
Flachsmarktstr. 8
32825 Blomberg
Germany
Tel. +49 5235 300
Fax +49 5235 3 41200
http://www.phoenixcontact.com